GOBİZ®

GASOLINE GENERATOR
USER MANUAL



PLEASE READ THE USER MANUAL CAREFULLY BEFORE USING OUR PRODUCT.

www.gobizenerji.com

CE

SAFETY
SAFETY LABEL LOCATIONS

These labels warn of potential hazards that could cause serious injury. Read carefully.
If any label is torn or becomes unreadable, request a new one from the generator dealer.

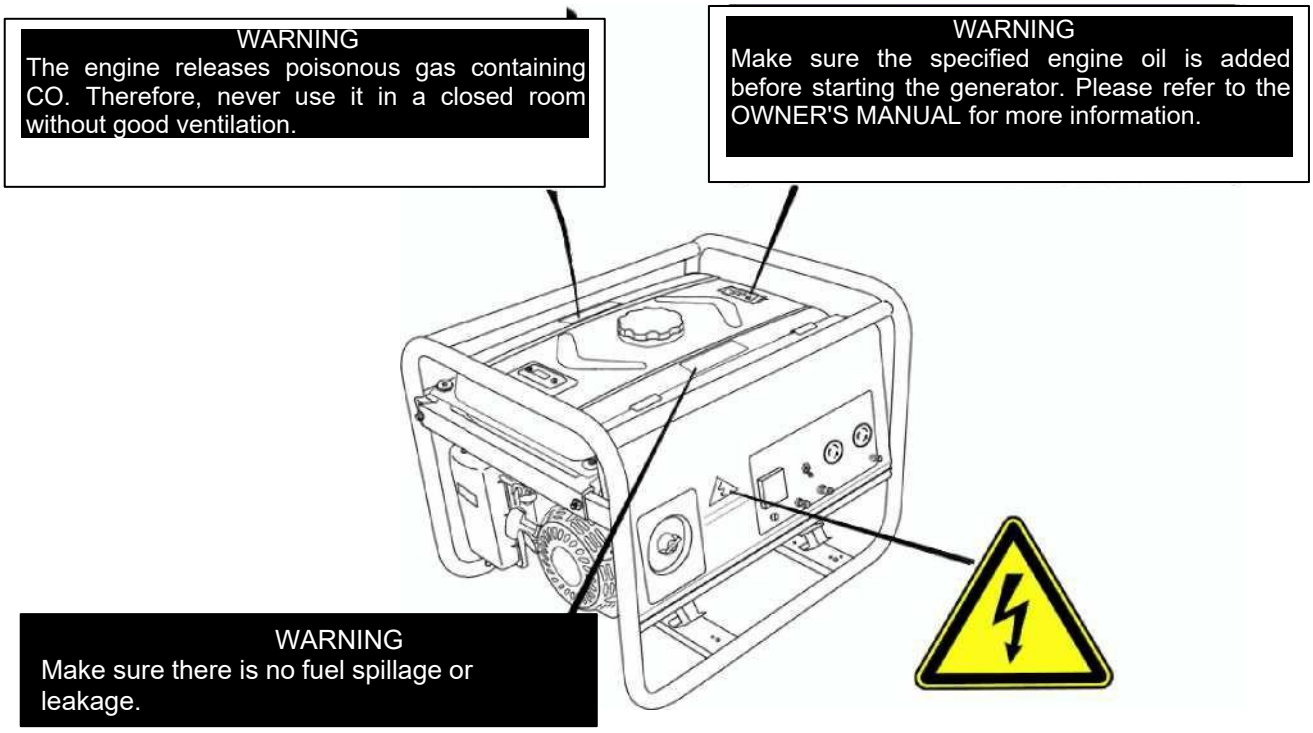

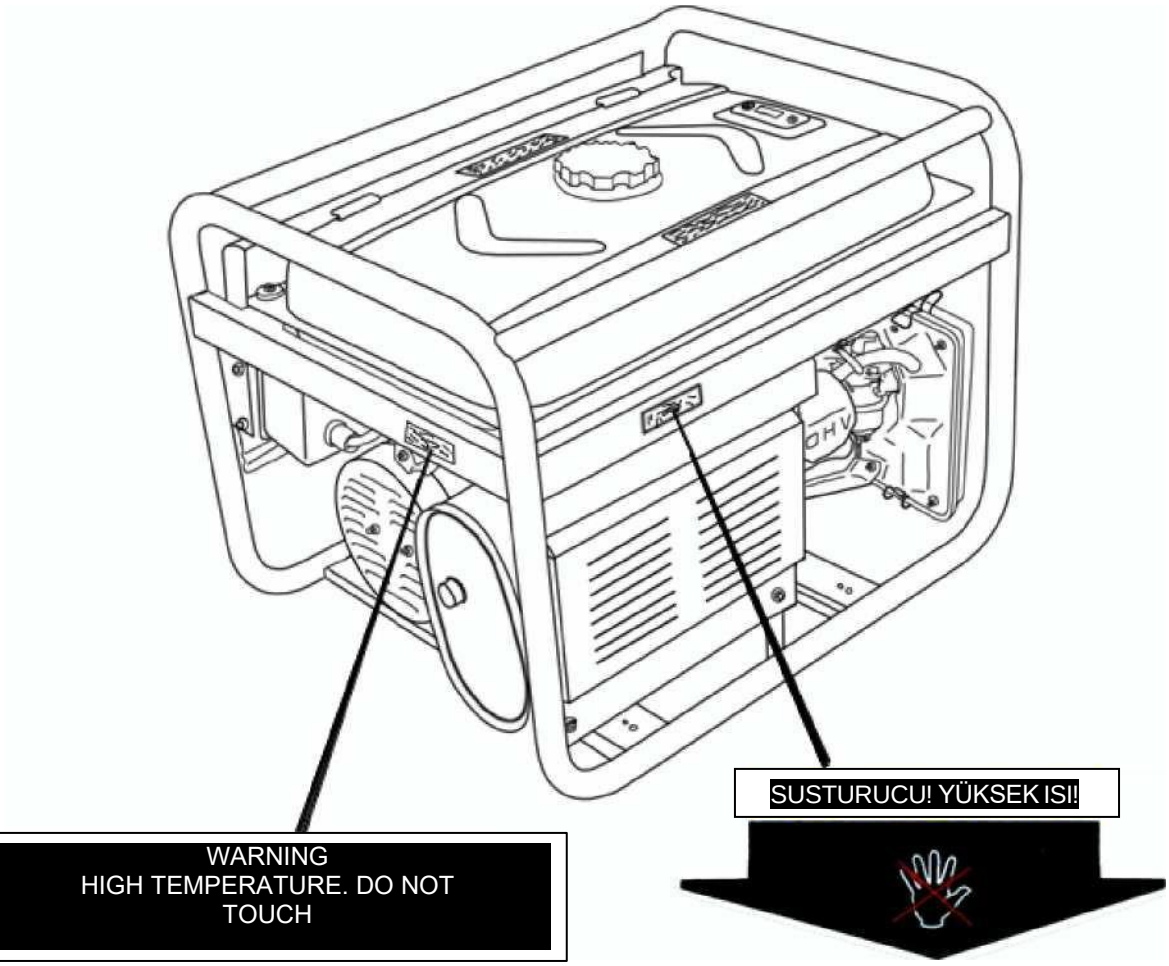
WARNING
HIGH TEMPERATURE. DO NOT
TOUCH
SUSTURUCU! YÜKSEK ISI!

Safety Instructions

Generators are designed to be a safe and reliable source when operated according to the instructions. Before operating your generator, be sure to read and understand the user manual carefully. Learning about the generator's controls and safe operating procedures will help you prevent accidents.

User Responsibilities

- Know how to quickly shut down the generator in an emergency
- Understand how to use all generator controls, outlets and connections
- Make sure that everyone using the generator is properly instructed. Do not allow children to operate the generator without adult supervision. Keep children and animals away from the area where the generator is operating.
- Place the generator on a firm, level surface and do not allow dust and snow to accumulate in the environment.
- If the generator is used on a slope or overturned, fuel leaks may occur. Also, if the generator is overturned or buried in a soft surface, soil, dust or water may enter the generator.

Carbon Monoxide Danger.

- Exhaust gas contains poisonous carbon monoxide. Carbon monoxide is a colorless, odorless gas. Breathing exhaust can cause unconsciousness or death. • If you operate the generator in an enclosed, or even partially enclosed, area, the air you breathe will contain dangerous amounts of exhaust gas. Provide adequate ventilation to prevent exhaust gas buildup.

Danger of Electric Shock

- If the generator is not used properly, it can produce enough electricity to cause serious shock or electric shock.

- Operating the generator or electric tool during rain or snowfall, or near a wet environment such as a pool or irrigation system, or with wet hands can cause electric shock. Make sure the generator is dry.

- If the generator is stored outside without protection from the weather, check the control panel components before each use. Moisture or ice can cause deterioration or short circuits between electrical components, which can cause electric shock.

- Do not connect the generator to the building's electrical system unless an isolation switch has been installed by a qualified electrician.

Fire or Burn hazard

- The exhaust system gets hot enough to cause some materials to ignite.— Keep the generator at least 1 meter away from walls or other vehicles while operating.
  make sure it is far away.
  — Do not cover the generator in any way.
  --- Do not bring flammable materials close to the generator.

• The muffler gets very hot during operation and remains hot for some time after the engine has cooled. Be careful not to touch the muffler while it is hot. Wait until the generator has cooled before taking it indoors.

• Gasoline is a highly flammable and explosive substance under certain conditions. Do not smoke or allow flames or sparks to form in the area where gasoline is stored and when refueling the generator. Refuel in a well-ventilated area with the unit turned off.

• Fuel vapors are also highly flammable and can ignite before the engine starts. Be sure to clean up any fuel that has spilled into the environment before starting the generator.

COMPONENT DEFINITIONS

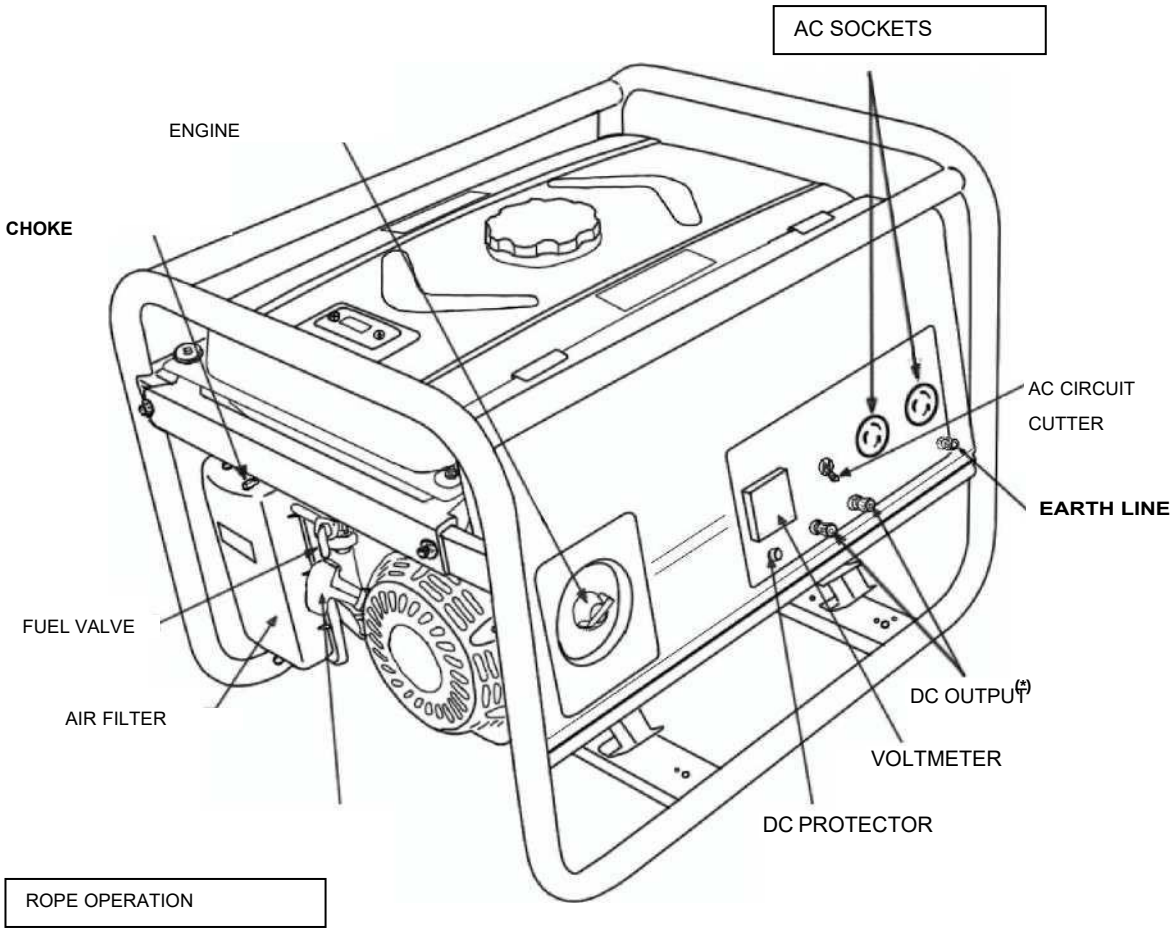

*** Available models**

ENGINE TYPE AND SERIAL NUMBER

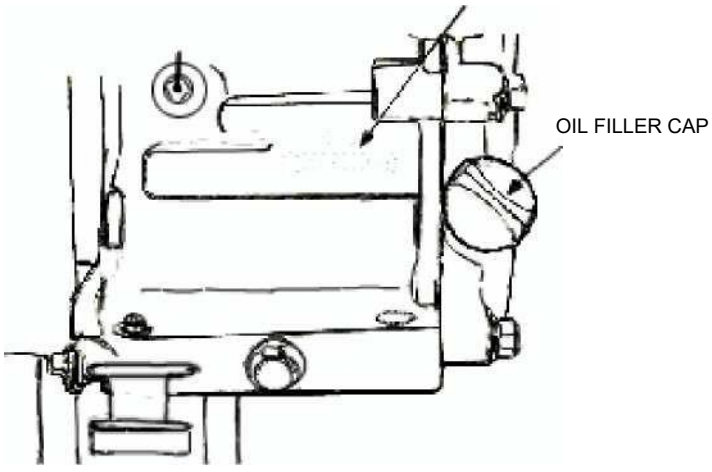

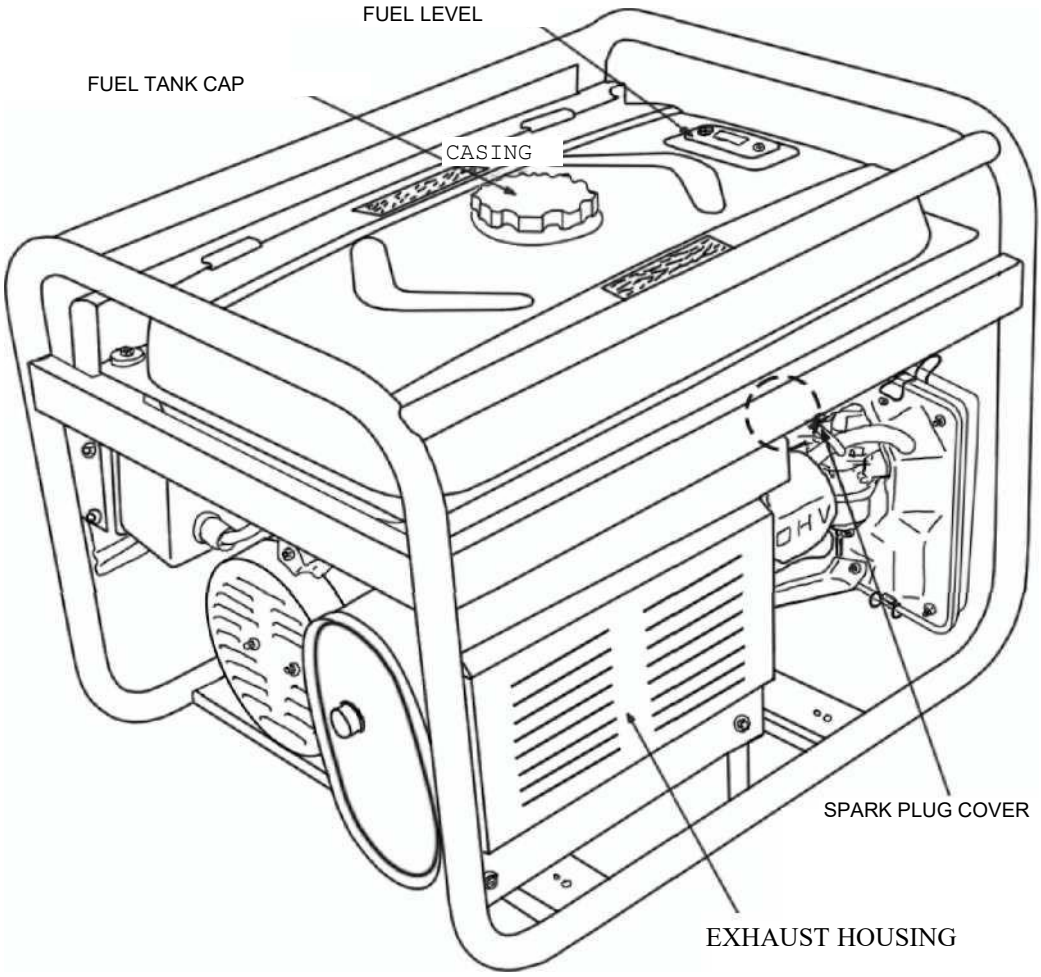

THREE PHASE TYPE

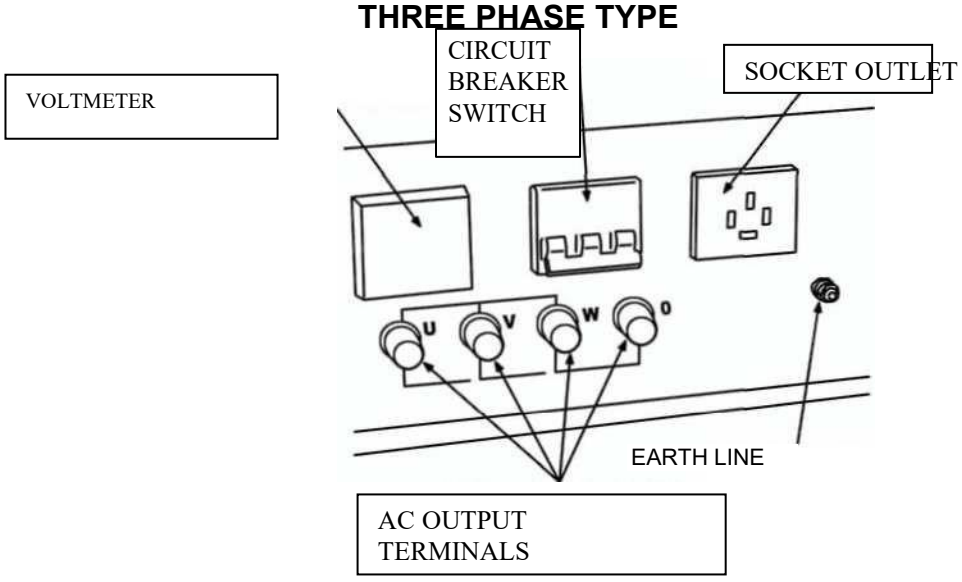

CONTROLS

Engine Key

Starts or stops the engine. For electric starter, hold in START position.

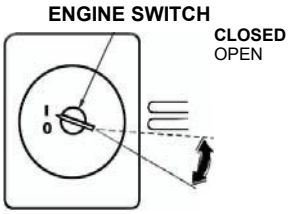

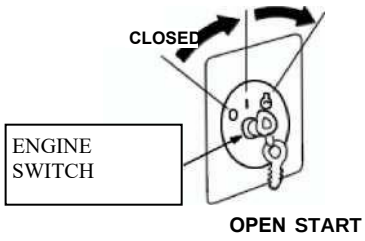

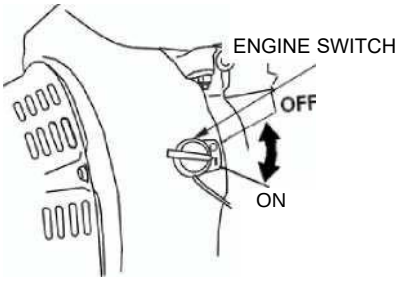

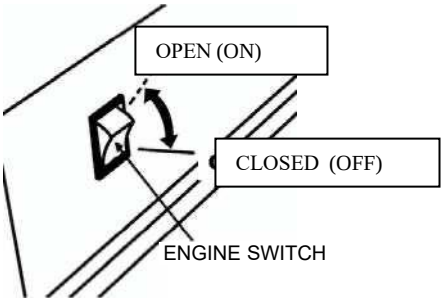

Rope Starting Device

To start the engine, slowly turn the starter handle until it is tight, then pull it quickly.

IMPORTANT **Do not allow the starter to snap back into the engine. Return it to its original position slowly to avoid damaging the starter.**

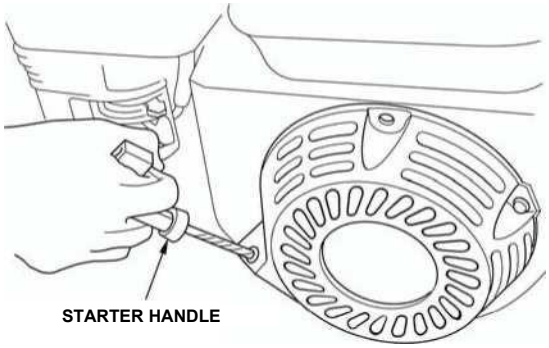

Fuel Valve

The fuel valve is between the fuel tank and the carburetor. When the valve lever is in the ON position, fuel can flow from the tank to the carburetor. Be sure to turn the lever to the OFF position after stopping the engine.

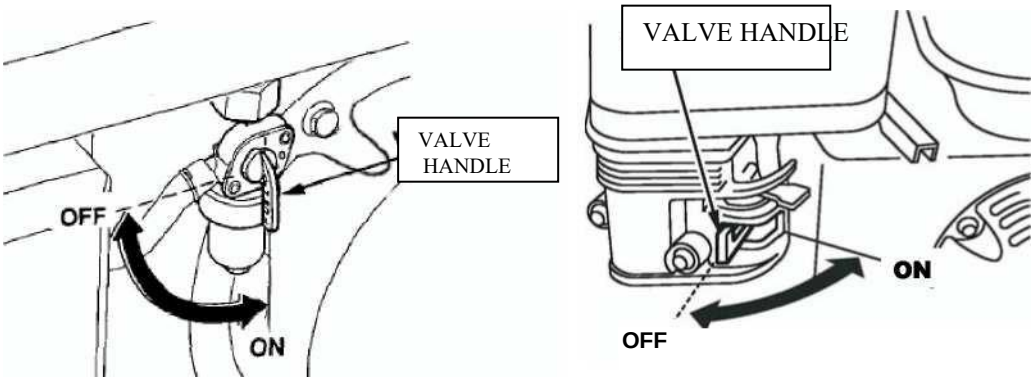

Choke

The choke is used to provide a rich fuel mixture when the engine is cold. It can be turned on or off by operating the choke lever or by moving the choke rod by hand. To enrich the mixture, move the lever or rod to the CLOSE position.

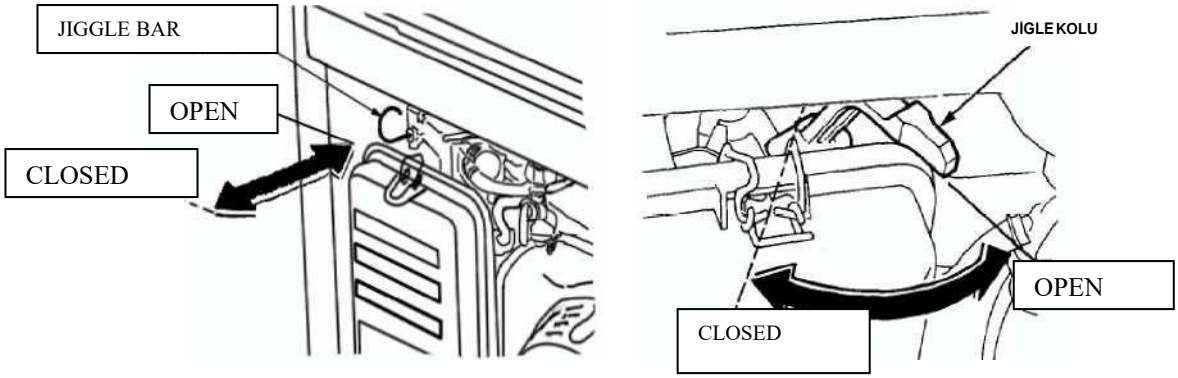

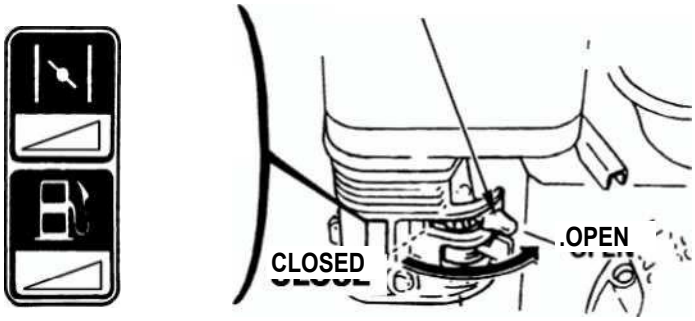

JIG HANDLE

Circuit Breaker

The circuit breaker automatically shuts down the engine if there is a short circuit or if there is too much load on the outlet. If the circuit breaker automatically goes to the OFF position, check that the device is working properly and that the load capacity is not exceeded before turning it back to the ON position. You can also use the circuit breaker to turn the generator output on and off.

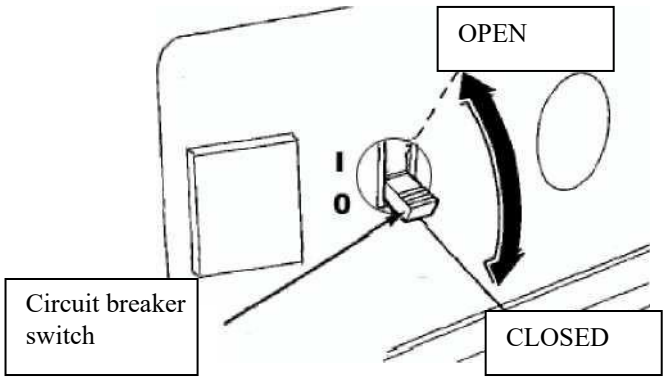

Ground Terminal

The ground wire is connected to the generator panel, the non-current carrying metal parts of the generator, and the ground terminals of each device. Talk to an electrical professional or your dealer to learn the laws regarding generator use.

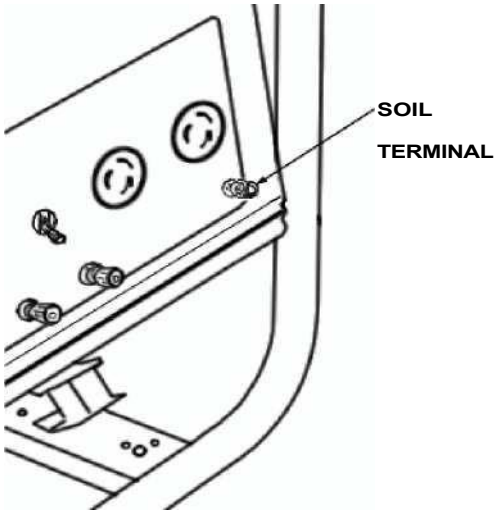

Oil Warning System

The oil warning system is designed to prevent engine damage due to insufficient oil in the crankcase. Before the oil level in the crankcase drops below a certain level, the oil warning system will automatically shut down the engine (the engine switch remains in the ON position). The oil warning system shuts down the engine and the engine will not restart. In this case, first check the engine oil. (See page 18)

USING THE GENERATOR

Connection to the Building's Electrical System
A qualified electrician must connect the system to the building's electrical system as a backup. When making the connections, the necessary equipment must be connected to the circuit so that the generator voltage does not meet the mains voltage, and must comply with all laws and electrical regulations.

ATTENTION An improper connection to the building's electrical system may cause the current coming from the generator to conflict with the mains power. This type of supply may cause death to people who touch the lines even though the power is out. Consult the electricity company or a qualified electrician.

WARNING An improper connection to the building's electrical system may cause the mains power to feed the generator.
When the mains power returns, the generator may explode, burn or cause a fire in the building's electrical system.

Grounding Line

To prevent electric shock from faulty devices, the generator must be grounded. Connect a thick cable to the ground line at the ground terminal. Generators have a system that connects the generator parts to the ground terminal on the AC output sockets. The ground line is not connected to the AC neutral line. When the generator sockets are checked with a tester, they will not give the same ground line conditions in the socket socket at home.

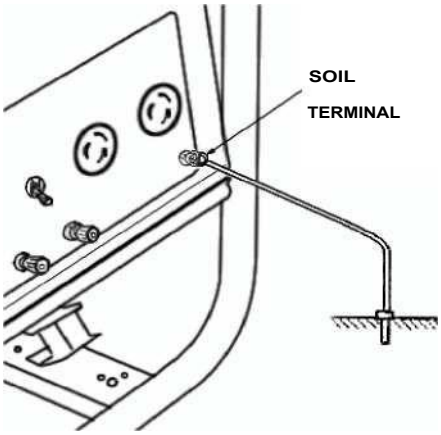

AC Applications
Before connecting an appliance or power cable to the generator:

- Make sure the device is working properly. Faulty devices or cables can cause electric shocks.
- • If an appliance starts to operate abnormally, slows down, or stops suddenly, turn it off immediately. Disconnect the device and check if the problem is with the device or if the load capacity of the generator has been exceeded.
- • Make sure that the electrical load of the device or appliance does not exceed the generator's power. Never exceed the generator's maximum power limit. Power levels between normal and maximum should not be used for more than 30 minutes.

IMPORTANT

Overloading will turn the circuit breaker to OFF position. Exceeding the maximum power operating time or overloading the generator may not turn the circuit breaker to OFF position but the life of the generator will be shortened.

Limit Limit operations requiring maximum power to 30 minutes. Do not exceed normal power for continuous operation.
In all cases, the total power requirement (VA) should be calculated considering all connected devices. Device manufacturers usually provide the power requirement along with the model number and serial number.

AC Operation

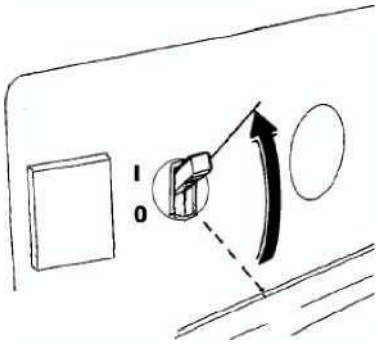

1. Start the engine (Page 21).

2. Turn the AC circuit breaker to the ON position
3. Plug in the power cord.

Most motorized appliances use more power than normal when starting.

Do not exceed the current limit for any outlet. If an overloaded circuit trips the AC circuit breaker, reduce the electrical load on the circuit, wait a few minutes, and reset the circuit breaker.

High Altitude Operation

At high altitudes, the standard carburetor air-fuel mixture will be too rich. This will reduce performance and increase fuel consumption.

High altitude performance can be improved by installing a smaller diameter main fuel nozzle and readjusting the tappet screw. If you are operating your generator at altitudes greater than 1500 meters above sea level, have your authorized generator dealer adjust the carburetor.

Even with the proper carburetor nozzle installed, the appliance's power will decrease by approximately 3.5% for every 300 meters. This rate will be even higher if the carburetor is not adjusted.

CAUTION: When you use the engine at low altitude with a nozzle set for high altitude, insufficient air-fuel mixture will reduce performance and may cause the engine to overheat and suffer serious damage.

PRE-STARTING CHECKS

Engine oil

ATTENTION Engine oil is an important factor that determines the performance and service life of the engine. 2-stroke engine oils in our 4-stroke products will seriously damage your engine and are not recommended.

Check the oil level on a level surface with the engine off BEFORE EACH USE.

Using American automotive manufacturers' Service SG, SF/CC, CD classes or higher

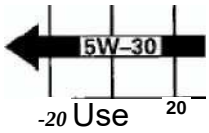

quality 4-stroke or equivalent high quality engine oil. These grades are indicated on the cans of engine oils in the SG, SF/CC, CD classes.

SAE 10W-30 is recommended for use at normal temperatures.

Remove the oil cap and clean the oil level dipstick.
Check the oil level by inserting the dipstick through the cap without turning it.
In our single cylinder products, oil should be filled to the overflow level on a flat surface.
If the level is insufficient, fill with the recommended oil up to the upper mark on the dipstick.

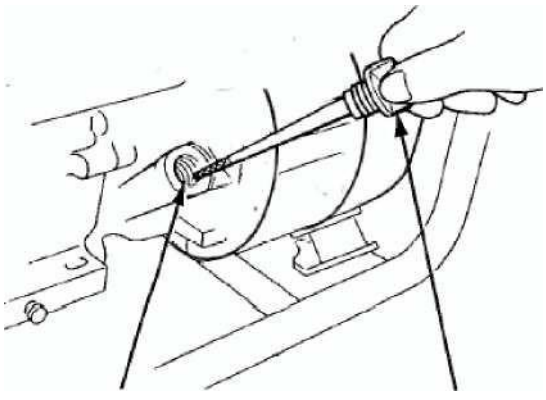

OIL FILLER HOLE OIL FILLER CAP

Fuel Recommendations

Check the fuel level indicator. If the fuel level is low, fill the tank. Do not fill above the fuel strainer.

WARNING

Gasoline is extremely flammable and explosive under certain conditions. Refuel in a well-ventilated area with the engine off. Do not smoke, light a fire or create sparks while the engine is being refueled or in the area where fuel is being stored. Do not overfill the fuel tank (no fuel should be present where the neck of the cap is). Make sure the fuel cap is properly closed after refueling. When refueling, try not to spill fuel on the ground. Spilled fuel or fuel vapors can ignite. If fuel is spilled, make sure the area is thoroughly cleaned before starting the engine. Do not allow continuous or repeated contact with skin. Do not breathe vapors. KEEP FUEL OUT OF REACH OF CHILDREN.

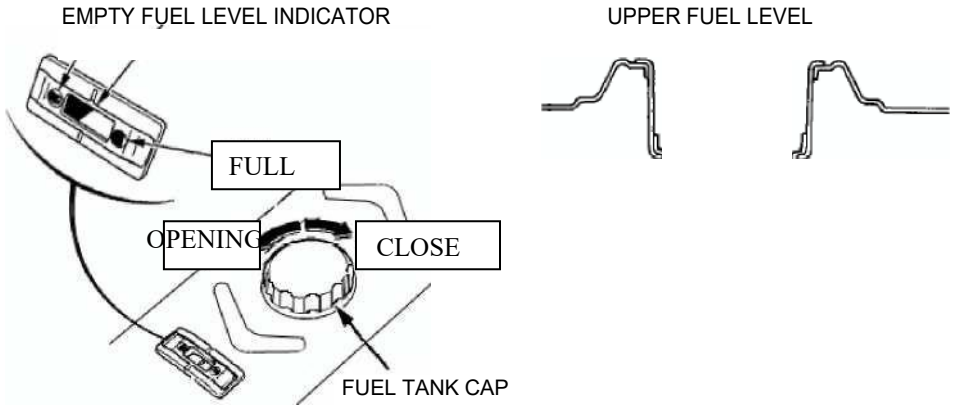

Use gasoline with an octane rating of 86 or higher. DO NOT MIX OIL with gasoline.
We recommend using unleaded gasoline because unleaded gasoline causes less engine and spark plug deposits and extends exhaust life.
Never use old or dirty gasoline or oil/gasoline mixtures. Prevent dust or water from entering the fuel tank.
You may hear a spark strike or a ping when the unit is operating under heavy load. This is not a problem. However, if the spark strike or hum occurs under normal load and constant engine speed, change your gasoline brand. If the problem persists, contact your authorized generator dealer.

CAUTION Running the engine with constant knocking or pinging can damage the engine.

Using the engine with constant knocking or pinging is improper use. The dealer warranty does not cover parts damaged by improper use.

Oxygenated Fuels

Some gasolines are mixed with alcohol or ether compounds to increase the octane level. This type of gasoline is often called oxygenated fuel. In some parts of the United States, oxygenated fuels are used to prevent air pollution. If you are using oxygenated fuel, make sure the pump octane rating is 86 or higher.

Ethanol (Ethyl or granulated alcohol)

Gasolines containing more than 10% ethanol can cause starting or performance problems. Ethanol gasolines may also be sold under the name “Gasohol”.

Methanol (Methyl alcohol)

Gasolines containing methanol must contain solvents and friction inhibitors to protect the fuel system. Gasolines containing more than 5% methanol may cause starting and/or performance problems and may damage metal, plastic or rubber parts of the fuel system.

MTBE (Methyl tertiary butyl ether)
You can use gasoline containing up to 15% MTBE. Before using oxygenated fuel, try to be sure of the fuel content. In some states (Canadian provinces), this information is required to be displayed at gas stations. If you experience any undesirable effects, switch to regular unleaded gasoline. Fuel system malfunctions or performance problems caused by using oxygenated fuel are not our responsibility and are not covered by warranty.

Oxygenated fuels can damage paint and plastic. Be careful not to spill fuel when filling the fuel tank. Damage caused by spilled fuel is not covered by warranty.

TURNING THE ENGINE ON AND OFF

Starting the engine

1. Make sure the AC circuit breaker is in the OFF position.

The generator may have difficulty starting with any load connected.
Turn the fuel valve to the ON position.
Put the choke lever to the CLOSE position or turn the choke rod CLOSE Pull in the direction.
Starting the engine

With a rope starter:

Turn the engine switch to the ON position. Pull the starter handle until you feel pressure, and after you feel the rope is empty, pull quickly without letting go or leaving any slack. Do not pull the rope by hitting it.

With electric starter:

Turn the engine key to the START position and hold it there for up to 5 seconds or until the engine starts.

ATTENTION **Operating the starter motor for more than 5 seconds may damage the engine. If the engine does not start, release the key and wait 10 seconds before using the starter again.**

If the starter motor speed decreases after a while, this is an indication that you need to charge the battery.

After the engine starts, return the engine switch to the ON position.

Once the engine has warmed up, rotate the choke lever or push the choke rod to the OPEN position.
Stopping the Engine.

In case of emergency:

To stop the engine in an emergency, turn the engine switch to the OFF position.

In normal use:

1. Turn the AC circuit breaker to the OFF position.

2. Turn the engine switch to the OFF position.

3. Turn the fuel valve to the OFF position.

MAINTENANCE

Good maintenance is the basis for safe, economical and trouble-free use. It also prevents air pollution. **motoru**

WARNING **Exhaust gas contains poisonous monoxide. Stop the engine before performing maintenance. When the engine is running, make sure that the environment is well ventilated.**

Periodic maintenance and adjustments are necessary to keep the generator in good working condition. Perform service and inspections according to the following maintenance schedule.

MAINTENANCE SCHEDULE

REGULAR SERVICE PERIOD Period specified month or working hours, whichever comes first. ARTICLE		Every use	First month or 10 hours of work	Every 3 months or 50 hours of work	Every 6 months or so work	Every year or 300 hours of work
Engine oil	Check the level	O				
	Change		O		O	O
Air filter	Control	O				
	Clear /Change			0(1)		O
Sediment bowl	Clear		O		O	
Spark plug	Check-clear				O	O
Spark Protector	Clear				O	
Valve adjustment	Check-adjust				O	0(2)
Fuel tank and strainer	Clear	O				0(2)
Fuel pipe	Check it out	Every two years (Renew if necessary) (2)				

(1) If used in dusty areas, perform maintenance more frequently.

(2) These items should be performed by a qualified person with appropriate tools and mechanical competence.

In professional commercial use, a record of maintenance intervals should be kept.

WARNING Poor maintenance or failure to correct a problem before starting operation can result in malfunctions that could lead to serious injury or death. Be sure to follow the inspection and maintenance recommendations and timing.

THE ABOVE MAINTENANCE MUST BE DONE BY AN AUTHORIZED SERVICE DURING THE WARRANTY PERIOD.
IN ORDER TO USE THE GENERATOR WITHOUT PROBLEMS AND AT HIGH EFFICIENCY, THE ABOVE TABLE MUST BE FOLLOWED.

The maintenance schedule is valid for normal operating conditions. If you operate your generator under challenging conditions such as high load or high temperature, or generally humid or dusty environments, talk to your dealer to determine the maintenance periods that suit your needs.

Tool kit

The tools provided with the generator will make it easier for you to perform the maintenance specified on the following pages. Always keep the tool kit with the generator.

Engine oil change

Change the oil while the engine is still warm for a complete and quick change.

1. Remove the replacement plug and sealing ring, oil filler cap and drain the oil.
2. Reinstall the drain plug and sealing ring. Tighten the plug securely.
3. Fill with the recommended oil (page 21) and check the oil level.

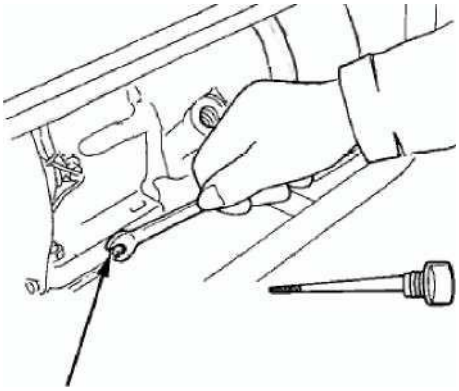

OLD OIL DRAIN HOLE

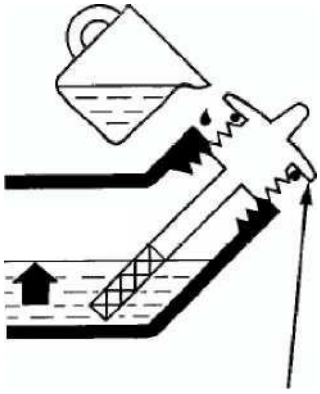

OIL FILLER CAP

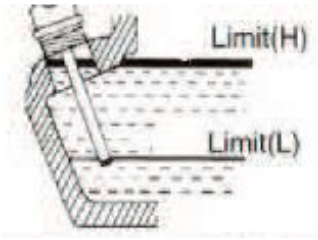

WARNING **Used motor oil can cause skin cancer if it comes into contact with your skin frequently and for long periods of time. Although you are unlikely to handle used oil every day, you should wash your hands with soap and water immediately after handling it.**

Please dispose of used engine oil in an environmentally friendly manner. We recommend that you place it in a sealed container and take it to your local service station or recycling center. Do not throw it in the trash or spill it on the ground.

Air filter maintenance

A dirty air filter will restrict air flow to the carburetor. Clean the air filter regularly to prevent carburetor deterioration. If you operate the generator in extremely dusty environments, clean it more frequently.

WARNING **Cleaning the filter with gasoline or a flammable solvent can cause a fire or explosion. Use only soapy water, water or a non-flammable mixture.**

Never operate the generator without an air filter. Your engine can wear out quickly.

ATTENTION

). Open the air filter cover clips, remove the air filter cover and remove the part.

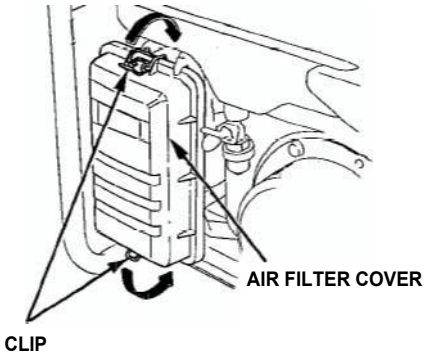

) Wash the element in warm water with detergent then dry it properly; or wash it in a non-flammable or high ignition temperature solvent. Make sure the element is dry.

). Moisten the filter with engine oil and remove any excess oil. If too much oil remains, the engine will smoke when first started.

Reinstall the air filter element and cover.

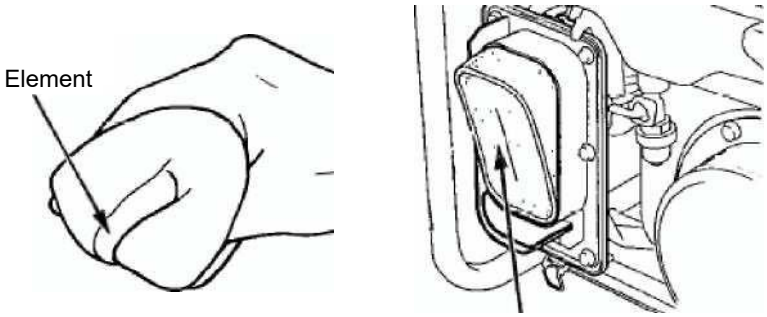

Air filter element

Fuel Sediment Cup Cleaning
The sediment cup prevents dust or water that has entered the fuel tank from entering the carburetor.
If the engine has been running for a long time, the sediment cup should be cleaned.

®. Turn fuel valve to OFF position. Remove sediment cup and o-ring.

©. Clean the sediment cup and o-ring with a non-flammable or high ignition temperature solvent.

®. Reinstall the o-ring and sediment cup.

®. Turn the fuel valve to the ON position and check for leaks.

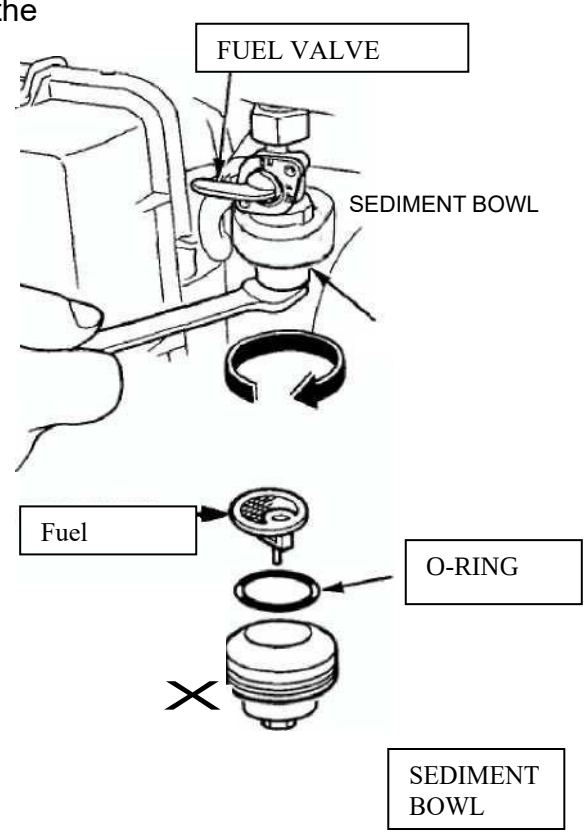

Spark Plug Service

Proper spark plug gap must be maintained and spark plugs must be free of deposits to ensure proper engine operation.

If the engine is running, the muffler will be very hot. Do not touch the muffler.

Remove the spark plug cap.
Clean the dirt around the spark plug base.
Use the wrench that comes in the tool kit to remove the spark plug.
If your engine is hot, never remove the spark plug, remove it after the engine has completely cooled down.

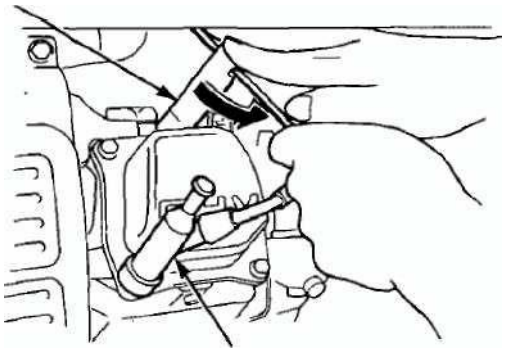

SPARK PLUG WRENCH SPARK PLUG HEAD

Visually inspect the spark plug. If the spark plug is cracked or broken, discard it. If the spark plug is to be reused, clean the spark plug with a wire brush.

Measure the spark plug cap with a feeler gauge. Carefully trim the side electrode as necessary.

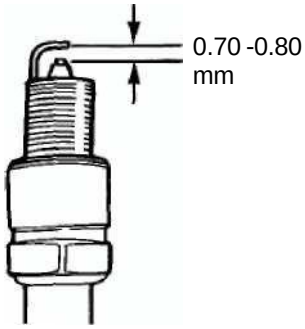

The gap should be: 0.70-0.80 mm (0.028-0.031 in).

. Check that the spark plug washer is in good condition and thread the spark plug in by hand to prevent cross-grooving.

. After the spark plug is seated, tighten it with a spark plug wrench to compress the washer. If installing a new spark plug, tighten it ½ turn to compress the washer after the spark plug is seated. If reinstalling a used spark plug, tighten it 1/8 - ¼ turn to compress the washer after the spark plug is seated.

IMPORTANT

The spark plug must be tightened securely. A spark plug that is not tightened properly can overheat and damage the engine. Do not use spark plugs with an incorrect heat range. Use only recommended spark plugs or equivalents.

Spark Arrester Maintenance

If the generator is running, the muffler will be very hot. Allow it to cool before proceeding.

ÖNEMLİ The spark arrester should be serviced every 100 hours to maintain efficiency.

To remove the muffler guard, loosen the 6mm bolts.
Remove the two 8mm bolts on the exhaust pipe and the two 8mm bolts on the muffler base.
Remove the muffler and spark arrester.

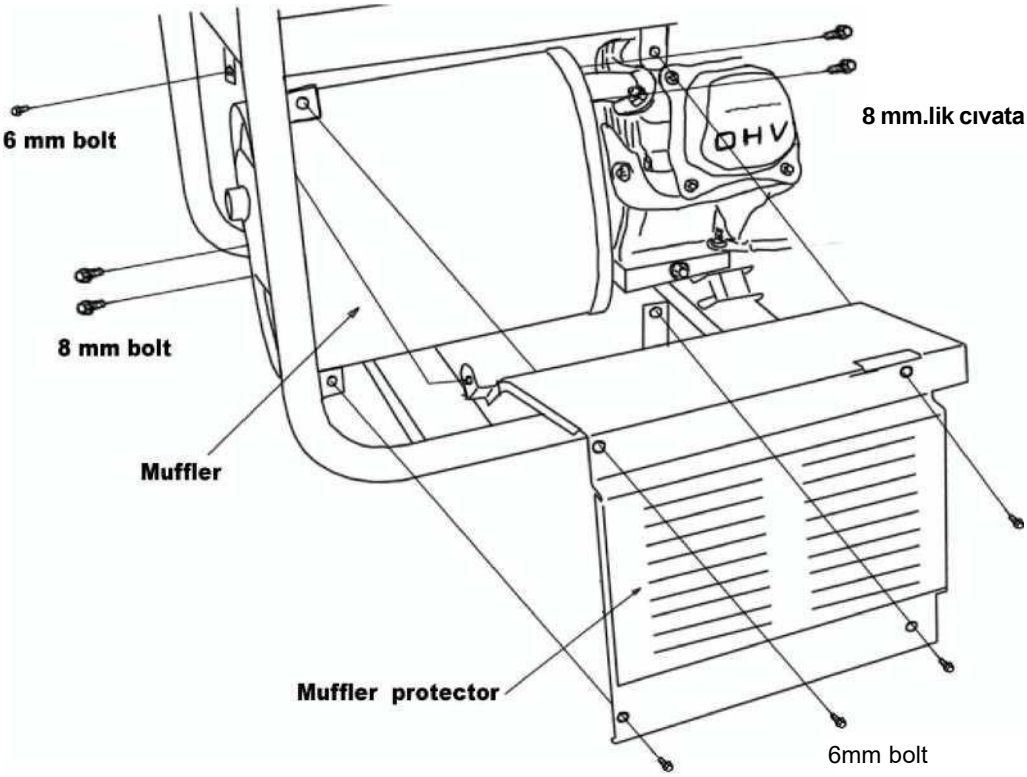

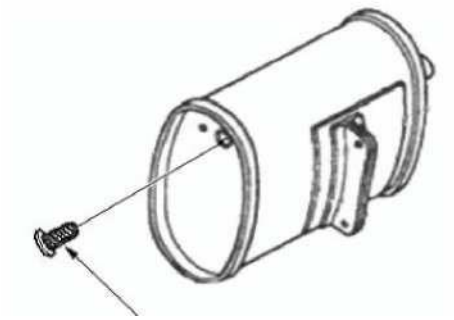

SPARK ARRESTER

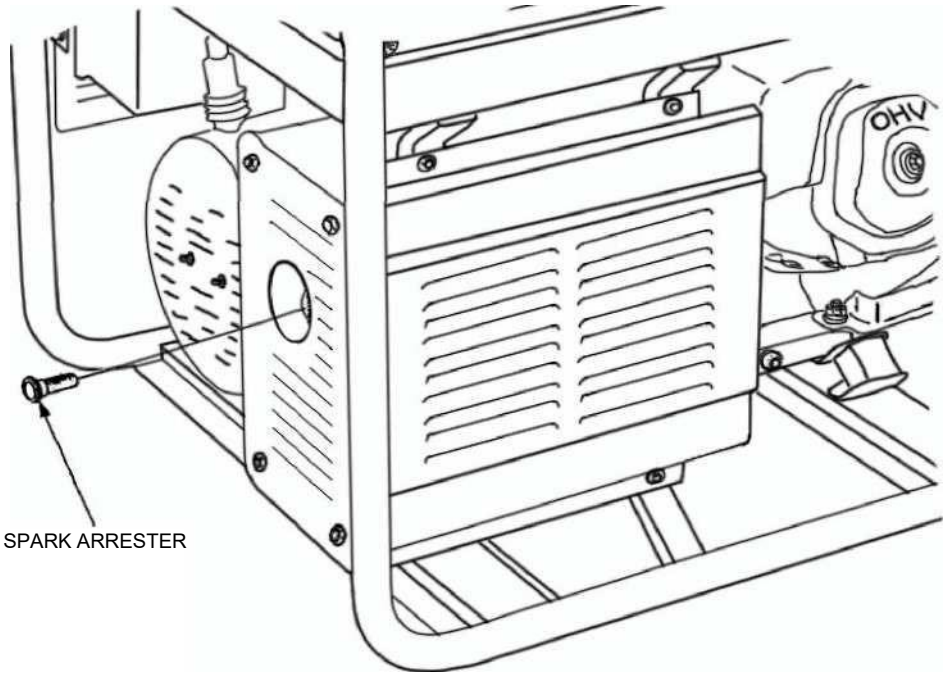

Use a brush to remove carbon deposits from the spark arrester screen. Check the spark arrester for holes or tears. Replace if necessary.

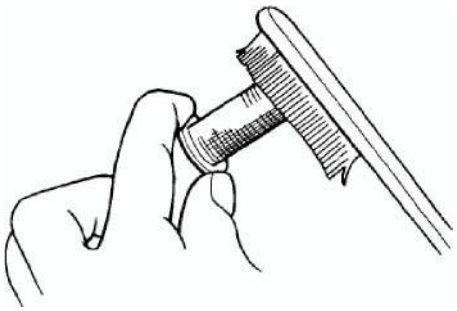

Check the exhaust pipe gasket and replace if damaged. Reinstall the muffler and guard.

TRANSPORTATION / STORAGE

When transporting the generator, turn the engine switch on and close the fuel valve. Keep the generator level to prevent fuel from spilling. Fuel vapor or spilled fuel may ignite.

WARNING **Contact with a hot engine or exhaust system can cause serious burns or fire. Allow the generator to cool before transporting or storing.**

Be careful not to drop or bump the generator during transportation. Do not place heavy objects on the generator.

Before storing the unit for a long period of time:

Make sure the storage area is free of excessive moisture and dust.

Serve as per the table below:

STORAGE PERIOD

	RECOMMENDED SERVICE PROCEDURE TO PREVENT ENGINE DIFFICULTY START
Less than 1 month	No preparation required Fill with fresh gasoline and add gasoline conditioner*
1 to 2 months	Fill with fresh gasoline and add gasoline conditioner* Empty the carburetor float chamber (page 29) Empty the fuel sediment cup (page 24) Fill with fresh gasoline and add gasoline conditioner* Empty the carburetor float chamber (page 29) Empty the fuel sediment cup (page 24)
2 months to 1 year	Remove the spark plug. Put a tablespoon of engine oil into the cylinder. Slowly turn the engine over with the pull cord to distribute the oil. Reinstall the spark plug.
1 year or longer	Change the engine oil (page 22) After removing from the tank, drain the stored gasoline into a suitable container and fill with fresh gasoline before starting.

**Use gasoline conditioners formulated to extend storage life. Contact your generator dealer for conditioner recommendations.

>. Turn your fuel tap to the closed position and run your generator at idle. It will stop automatically after it has finished the gasoline in the fuel line. Then, drain the carburetor by loosening the drain screw at the bottom of the carburetor. This will eliminate any gasoline in the fuel system and the possibility of clogging the small nozzles in the system over time.

WARNING Gasoline is extremely flammable and explosive under certain conditions. Perform this procedure with the engine off. Do not smoke or keep flammable materials or sparks away from the area during this procedure.

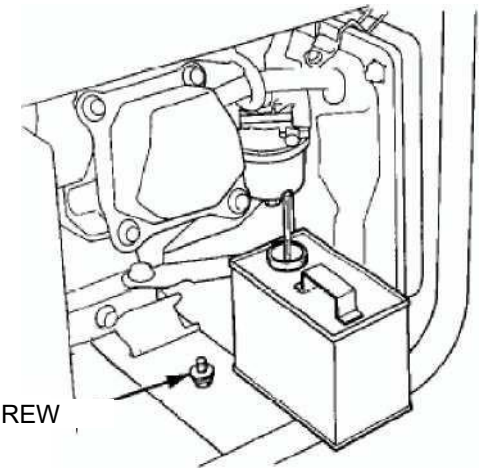

Replace the engine oil.

Remove the spark plug and pour a tablespoon of clean engine oil into the cylinder.

Crank the engine a few times to distribute the oil, then reinstall the spark plug. Slowly pull the starter grip until resistance is felt. At this point, the piston is on its compression stroke and both the intake and exhaust valves are closed. Storing the engine in this position will help protect the engine from internal corrosion.

TROUBLESHOOTING

If the engine does not start:

Is there gas in the fuel tank?

NO → Fill the fuel tank.

YES ↓

Is there enough oil in the engine?

NO → Fill with recommended oil.

YES ↓

Is there a spark from the spark plug?

NO → Replace the spark plug.

still no spark → Take the generator to an authorized generator dealer.

WARNING

Make sure there is no fuel spilled around the spark plug. **Spilled fuel may burn.**

For control:
1) Remove the spark plug cap and clean the dirt around the spark plug.
2) Remove the spark plug and place the spark plug into the spark plug cap.
3) Adjust the spark plug side electrode on the cylinder head.
4) Turn the engine over, sparks will come out in the gap.

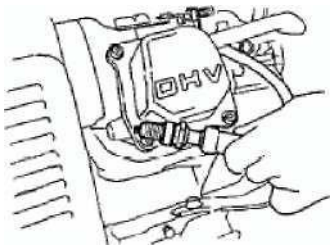

YES ↓

Is fuel reaching the carburettor?

NO → Clean the fuel sediment container

For control:
1) Turn off the engine on/ off switch and loosen the drain screw.
2) When the engine on/ off switch is turned on, fuel should flow from the drain.

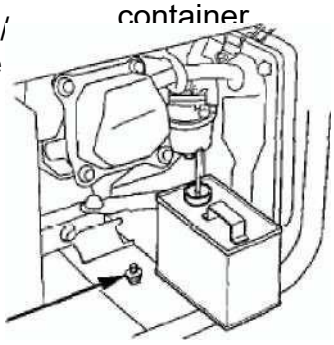

DRAIN SCREW

YES ↓

If the engine still does not start, take the generator to an authorized dealer.

No AC Electricity;

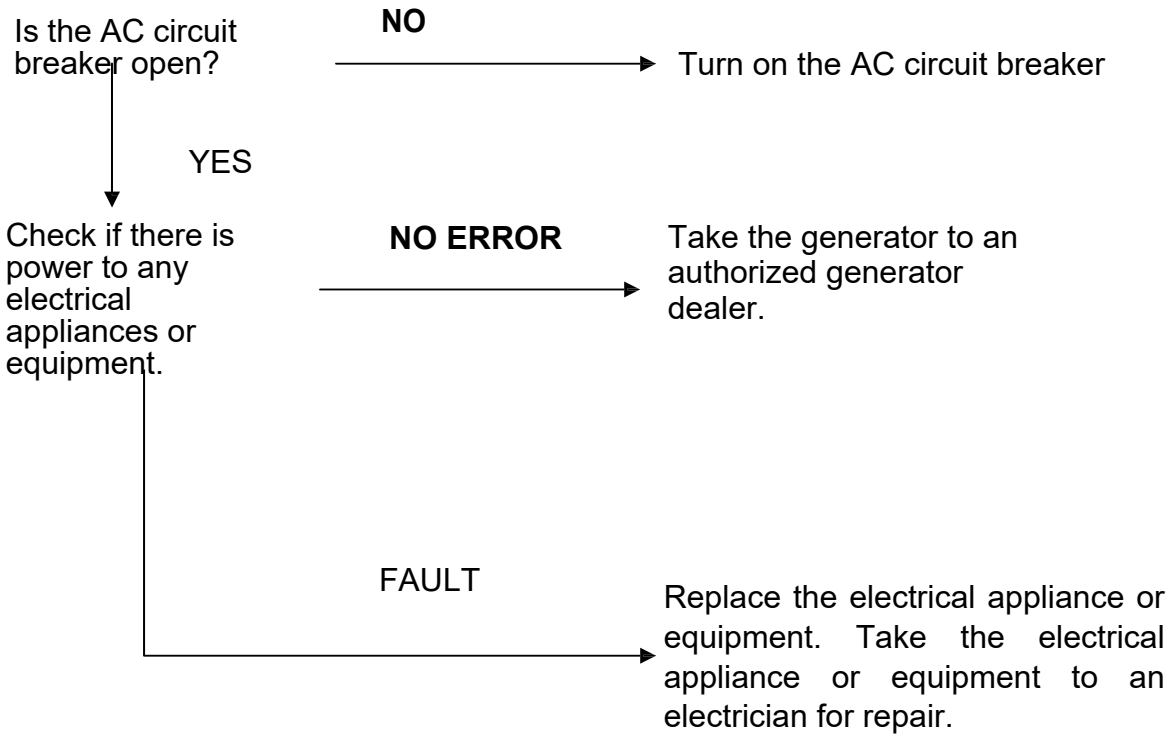

10. ELECTRICAL CONNECTION DIAGRAM

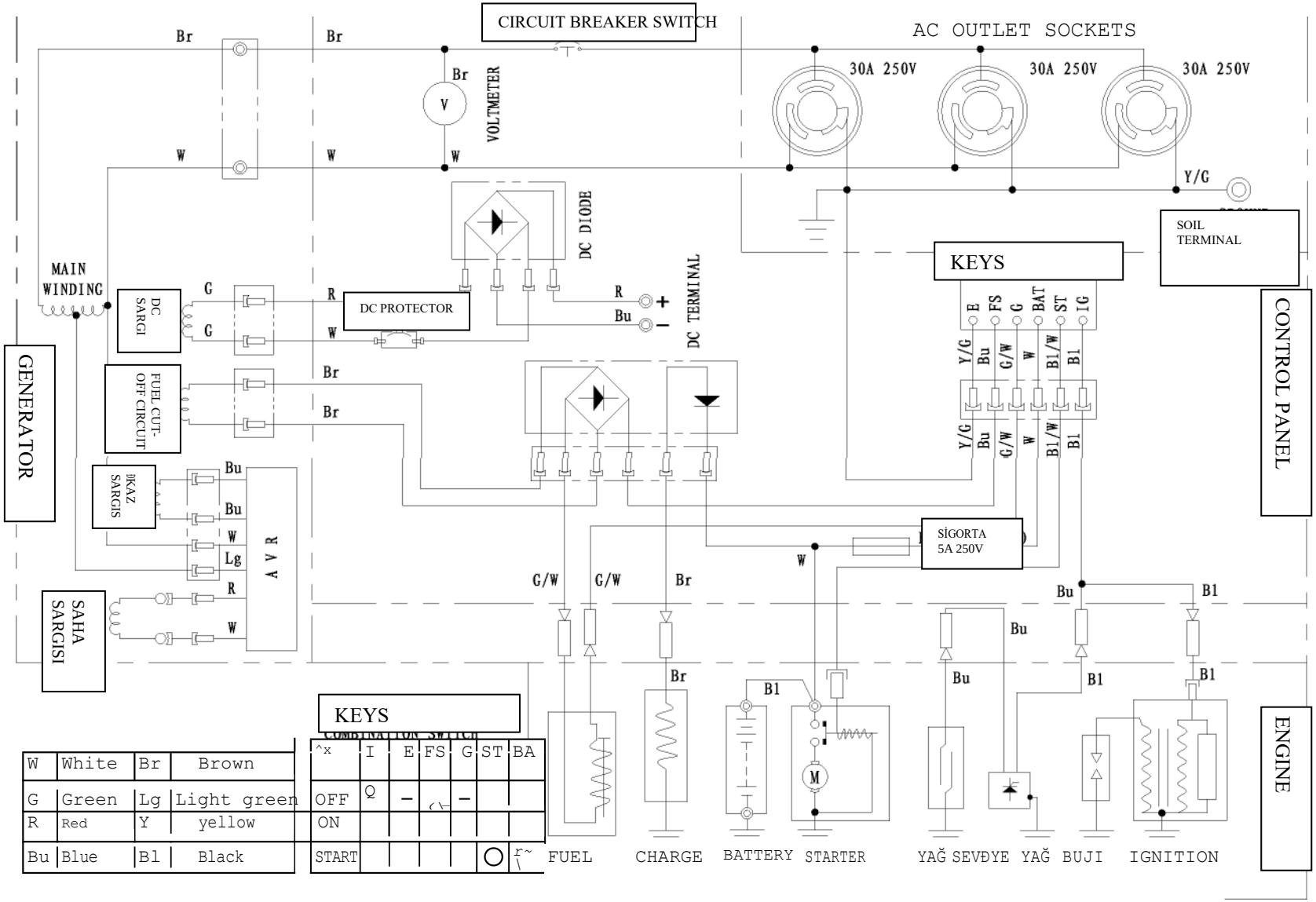

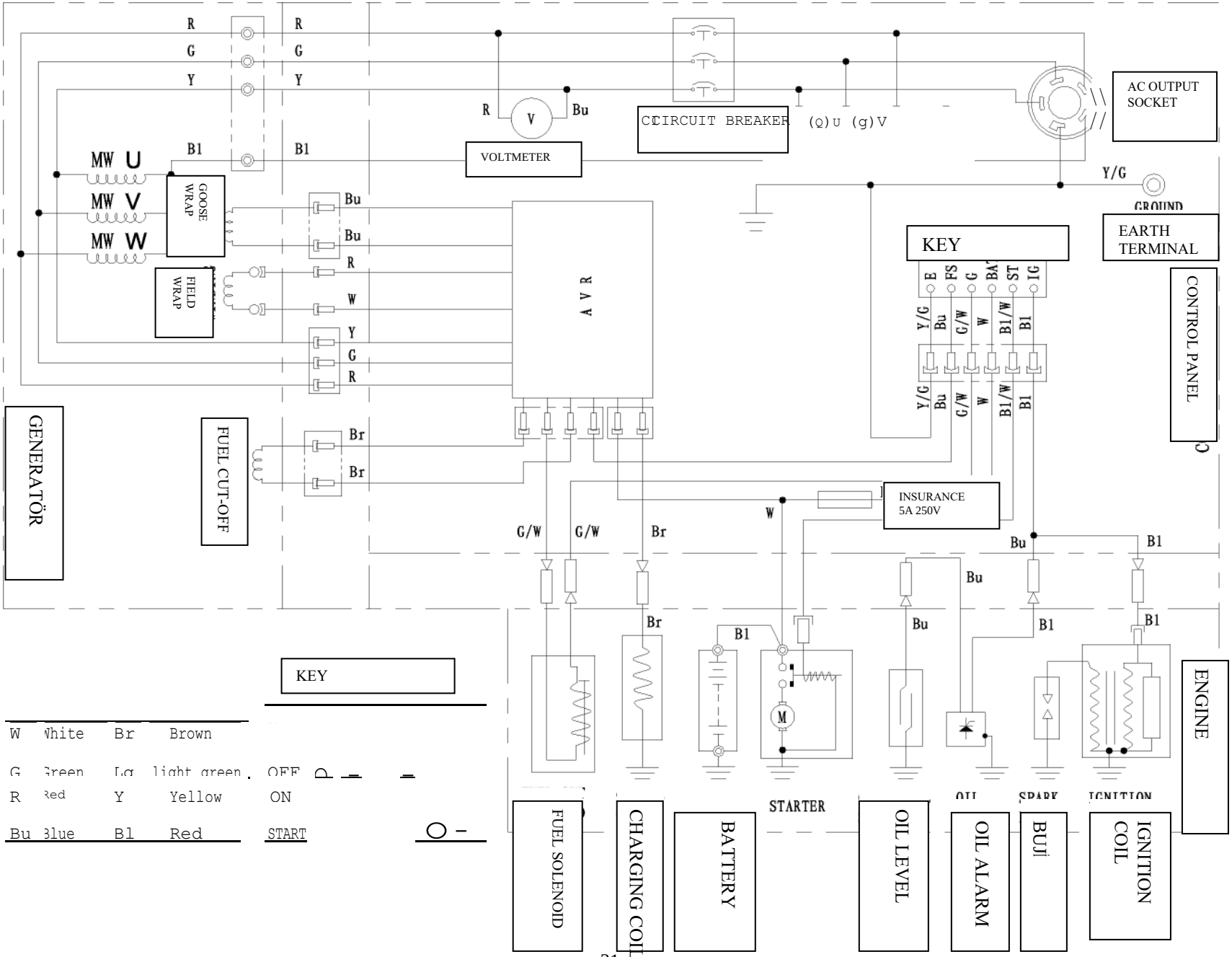
GENERATÖR
FUEL CUT-OFF
MW U
MW V
MW W
GOOSE WRAP
FIELD WRAP
A V R
VOLTMETER
CIRCUIT BREAKER
AC OUTPUT SOCKET
GROUND
EARTH TERMINAL
KEY
CONTROL PANEL
INSURANCE 5A 250V
ENGINE
STARTER
FUEL SOLENOID
CHARGING COIL
BATTERY
OIL LEVEL
OIL ALARM
IGNITION COIL
KEY
W White
Br Brown
G Green
Lg light green
R Red
Y Yellow
Bu Blue
Bl Red
OFF
ON
START

TECHNICAL SPECIFICATIONS

MODEL	GO-BM3.5	GO-BM3.5	GO-BM4	GO-BM4	GO-BM7
Output Power (kVA)(Cos:0.8)	3,5	3,5	3,8	3,8	7,0
Continuous Voltage (V)	230	230	230	230	E:230
Number of Phases	1	1	1	1	E: 1
Operation Type	X:İpli	E: Marşlı	E: Marşlı	İPLİ	Marşlı / İpli
Oil capacity (L)	0,65	0,65	0,65	0,65	1,1
Fuel Tank capacity (L)	15	15	15	15	25
Fuel Consumption	1,1	1,1	1,3	1,3	1,9
Dimensions[cm](LxWxH)	60x45x45	60x45x45	60x48x49	60x48x49	68x52x55
Dry Weight (Kg.)	40	41	49	45	80

MODEL	GO-BT7	GO-BM8	GO-BT8	GO-BM10	GO-BT10
Output Power (kVA)(Cos:0.8)	7,0	8,0	8,0	9,0	9,0
Continuous Voltage (V)	E3:400	E:230	E3:400	E:230	E3:400
Number of Phases	E3: 3	E: 1	E3: 3	E: 1	E3: 3
Operation Type	Marşlı / İpli	Marşlı / İpli	Marşlı / İpli	Marşlı / İpli	Marşlı / İpli
Oil capacity (L)	1,1	1,1	1,1	1,1	1,1
Fuel Tank capacity (L)	25	25	25	25	25
Fuel Consumption	1,9	1,9	1,9	2,6	2,6
Dimensions[cm](LxWxH)	68x52x55	70x55x59	70x55x59	70x55x59	70x55x59
Dry Weight (Kg.)	80	88	88	90	90

MODEL	GO-BM12	GO-BT12	GO12000EA	GO-BM15	GO-BT15
Output Power (kVA)(Cos:0.8)	10,5	10,5	10,5	15,0	15,0
Continuous Voltage (V)	E:230	E3:400	E:230	E:230	E3:400
Number of Phases	E: 1	E3: 3	E: 1	E: 1	E3: 3
Operation Type	Marşlı / İpli	Marşlı / İpli	OTOMATİK	Marşlı	Marşlı
Oil capacity (L)	1,1	1,1	1,1	1,4	1,4
Fuel Tank capacity (L)	25	25	25	15/25	15/25
Fuel Consumption	3,1	3,1	3,1	4,5	4,5
Dimensions[cm](LxWxH)	70x55x59	70x55x59	70x55x59	106X63X77	106X63X77
Dry Weight (Kg.)	96	96	96	135	135

*** GOBİZ reserves the right to make changes in the Features without notice**

POWER FACTOR FOR KW: 1
POWER FACTOR FOR KVA: 0.8

12. OPTIONAL PARTS

BATTERY
(FOR STARTER MODELS)
Battery Selection:
12V 6.5Ah to 9 Ah battery can be used in generators in the 2500-4500 model range
12V 14Ah to 30 Ah battery can be used in generators in the 5500-10000 model range.

NOTE:
Do not reverse the polarity. This may cause serious damage to the generator and/or battery.

WARNING:
If the battery is not used according to the procedure, it may explode and cause harm to people in the immediate vicinity.
Make sure that there is no flame, spark or smoking in the surrounding area while handling the battery.

Dry type battery is used. Maintenance free. One of the battery cables is not connected for safety reasons.
Battery standby time is 15 days.
To prevent battery deterioration, run the generator for 10 minutes every 15 days or charge it with a suitable charger.

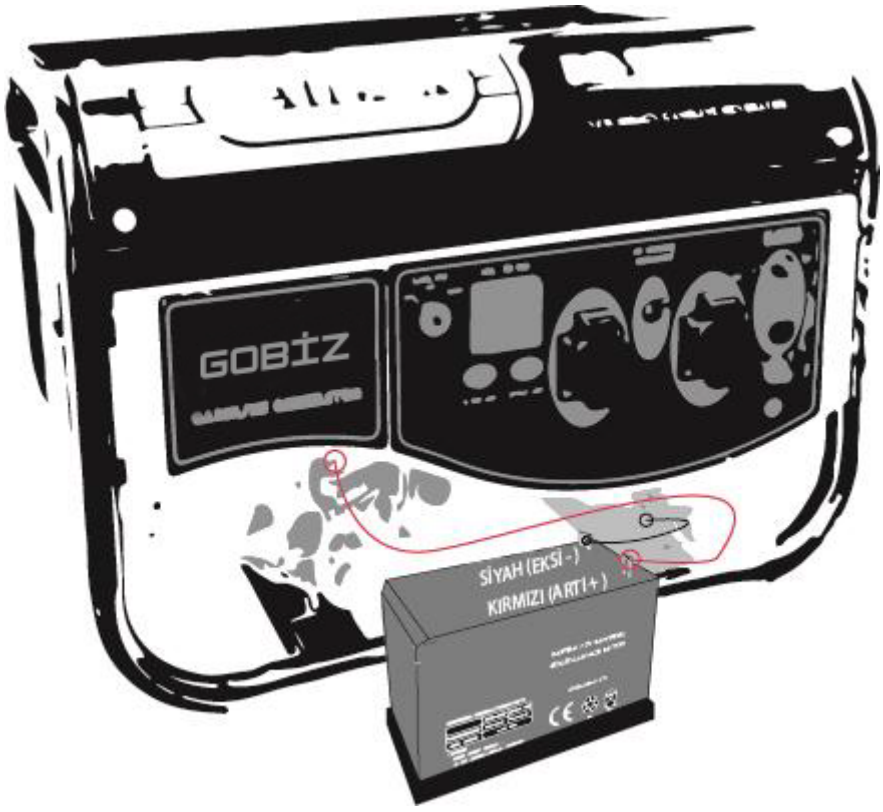

(-) BLACK CABLE
(+) RED CABLE

WHEELS

1) Attach the four wheels to the axle shaft.
2) Mount the axle to the generator using nuts and bolts.=

NOTE: Mount the shaft with the wheel brakes toward the motor direction.

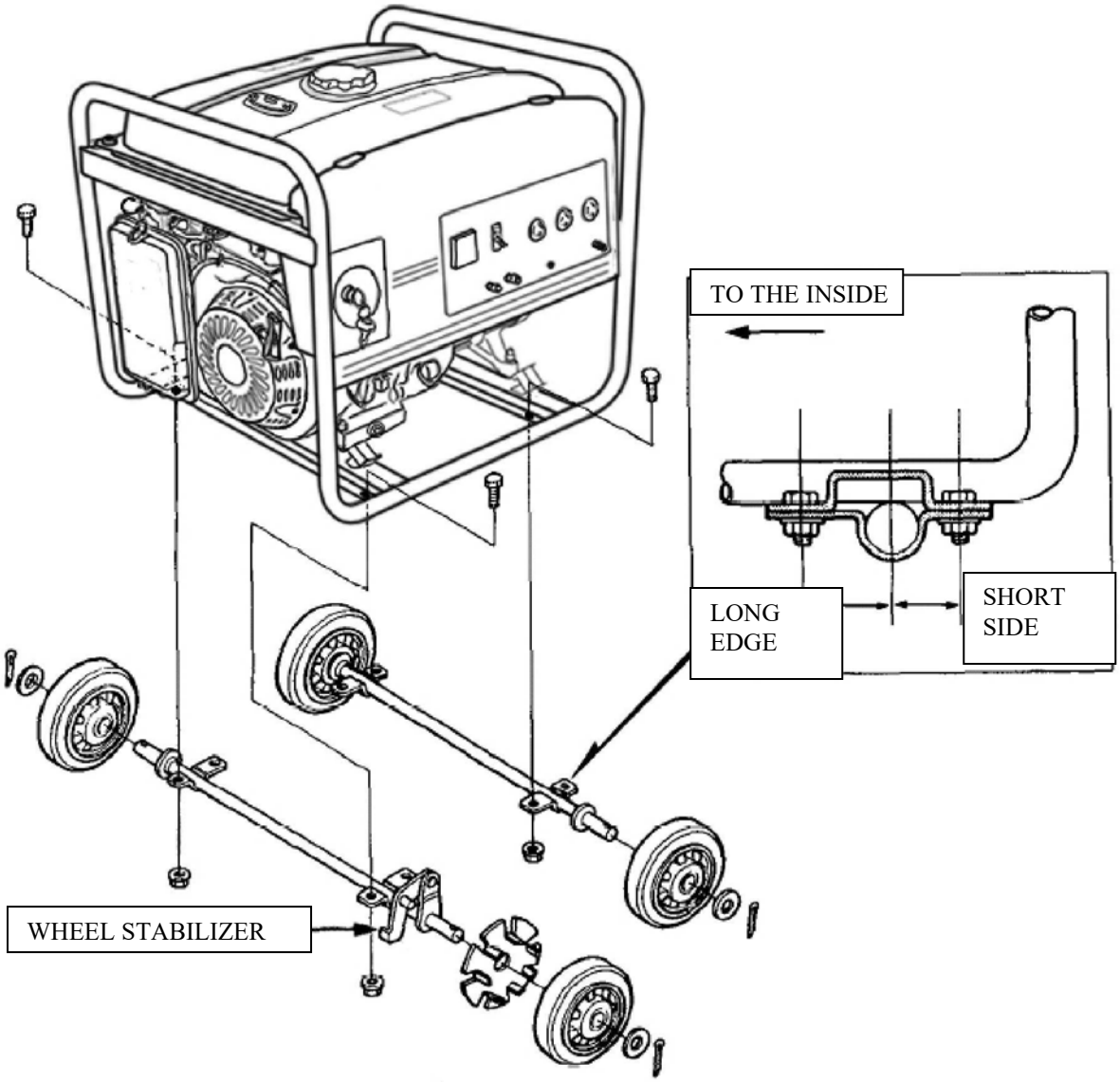

GOBİZ®

GARANTİ KAYIT
PERİYODİK SERVİS TAKİP FORMU

SATICI FİRMA

GOBİZ ENERJİ ANONİM ŞİRKETİ
V.N.: 396 139 9327 V.D.: GÜNEŞLİ
Taşocağı Yolu Cad. Mahmutbey Mah.
B Blok Bina No:28 Bağcılar / İSTANBUL
0850 241 0227 - 0850 241 8480
www.gobusiness.com.tr www.gobusiness.market
info@gobizenerji.com

ÜRÜN SAHİBİ

Adı Soyadı :.....

T.C/V.N :.....

Adres :.....

.....

Tel :.....

Mail :.....

ÜRÜN

Marka :.....

Cinsi :.....

Modeli :.....

Teslim Tarihi :.....

Fatura No :.....

Servis T.No :.....

GBSS34000ST-GO-M1.5 SERVİS TAKİP BARKOD NO

Ürünlerimizin üzerinde bulunan QR kod ile jeneratörünüzün geçmişi artık cebinizde !

GARANTİ TAMİR VE BAKIMDA YAPILAN İŞLER

YETKİLİ SERVİS.:

1. İLK ÇALIŞTIRMA - ÜRÜNE START VERME

Tarih :..... Yapılan işlemler ve kul. parçalar

YETKİLİ SERVİS.:

1. Bakım - İlk 20 Çalışma Saati veya 1. Ay Bakımı

Tarih :..... Yapılan işlemler ve kul. parçalar

YETKİLİ SERVİS.:

2. Bakım - 100 Çalışma Saati veya 6. Ay Bakımı

Tarih :..... Yapılan işlemler ve kul. parçalar

YETKİLİ SERVİS.:

3. Bakım - 200 Çalışma Saati veya 1. Yıl Bakımı

Tarih :..... Yapılan işlemler ve kul. parçalar

Bakımınızı çalışma saati yada fatura kesim tarihinize göre yaptırmalısınız. Çalışma saati önce dolarsa çalışma saatine, bakım tarihi önce gelirse tarihe göre yaptırmalısınız GARANTİ DIŞI kalmamak için ilk önce gelene göre bakımlarınızı yetkili servise yaptırınız.

GARANTİ TAMİR VE BAKIMDA YAPILAN İŞLER

YETKİLİ SERVİS.:

5. Bakım - 300 Çalışma Saati veya 1.5 Yıl Bakımı

Tarih :..... Yapılan işlemler ve kul. parçalar

YETKİLİ SERVİS.:

6. Bakım - 400 Çalışma Saati veya 2.Yıl Bakımı

Tarih :..... Yapılan işlemler ve kul. parçalar

YETKİLİ SERVİS.:

7. Bakım - 500 Çalışma Saati veya 2.5 Yıl Bakımı

Tarih :..... Yapılan işlemler ve kul. parçalar

YETKİLİ SERVİS.:

8. Bakım - 600 Çalışma Saati veya 3.Yıl Bakımı

Tarih :..... Yapılan işlemler ve kul. parçalar

Aylık bakımlar Business Servis sistemimizle tarafınıza hatırlatılır. Saati hatırlatmadan önce dolan jeneratörlerin bakımı için tarafımıza bilgi verilmesi zorunludur.
Jeneratörünüzün üzerinde bulunan QR kod ile yada servis takip numaranız ile servis.gobusiness.com.tr adresindengeçmiş dönem bakım ve onarım işlemlerinin kaydını görebilirsiniz.

GO-BIZ GENERATOR
5 Year (500S) Limited Warranty
For Residential and Commercial Generators

During the warranty period specified below and subject to successful operation and/or commissioning of the unit, the GOBIZ ENERJİ A.Ş. GO-BIZ GENERATOR Generator and/or transfer switch system shall be free from defects in material and workmanship for the period and periods specified below. GO-BIZ will, at its sole discretion, repair any defective equipment found to be defective after evaluation, inspection and testing by GO-BIZ or an Independent Authorized Service Provider. Any equipment claimed to be defective by the purchaser/owner must be evaluated by the nearest Independent Authorized Service Provider.

Warranty Coverage	**1**		**5**
Year(s)	Parts, Labor		Major Part Component Only

Major Component Coverage: Only covers engine (short block) and alternator (rotor and stator) parts in years 5.

Instructions:

- The warranty begins at the moment the unit is successfully started and/ or operationally commissioned.
- The unit must be registered and proof of purchase must be provided. All warranty repairs and/or concerns must be performed and/or addressed by an Independent Authorized Service Provider or GO-BIZ branch office.
- Repairs or diagnoses performed by individuals not authorized in writing by an Independent Authorized Service Provider will not be covered under warranty.
- This warranty is transferable between owners of the original installation.
- Engine coolant heaters (block heaters), heater controls and circulation pumps provided by GO-BIZ are only covered during the first year of the warranty period.
- GO-BIZ may elect, at its sole discretion, to repair, replace or refund any piece of equipment.
- The user must promptly follow the GO-BIZ Generator's inspection and general maintenance notices and have the necessary inspection/ maintenance performed.
- Enclosures are warranted against rust for the first year. Valid for ownership. Damage occurring after the generator is received is the responsibility of the owner and is not covered by this warranty. Any scratches, dents, dents or dents on the painted enclosure must be repaired immediately by the owner.
- Warranty applies to permanently attached and mounted units.
- Damage or consequential damage to components covered by warranty, including damage caused by the use of an original equipment manufacturer (OEM) part, will not be covered by the warranty.
- Proof that all required maintenance has been performed must be provided.
- Travel authorization is limited to a maximum of 100 miles and three (3) hours (whichever is less) from the nearest Independent Authorized Service Provider. Additional travel requirements are not covered.
- The user is responsible for having maintenance/inspection performed at the times and operating hours specified in the product manual.

The following situations are NOT covered by this warranty:

- Normal maintenance costs (e.g. adjustments, associated parts, adjustments, loose/leaky clamps, installation and start-up costs).
- Damage or failure of the generator and/or transfer switch system due to accidents, transportation, handling or improper storage.
- Damage caused by operation with fuels, speeds, loads or installations other than those recommended or specified by GO-BIZ.
- Damage or failure of the generator and/or transfer switch due to use of non-original parts and/or equipment, contaminated fuels, oils, coolants/ antifreezes or lack of suitable fuels, oils or coolants/antifreezes.
- Failure due to normal wear and tear, accident, misuse, abuse, neglect, improper installation, improper sizing or rodent, reptile and/or insect infestation.
- Rental equipment used during warranty repairs or extraordinary equipment used for generator removal and/or reassembly (e.g. hoists, winches, lifts, etc.).
- Aircraft, ferries, railroads, buses, helicopters, snowmobiles, snowcats, off-road vehicles or any other mode of transportation not accepted as standard by GO-BIZ.
- Products altered or modified in a manner not authorized in writing by GO-BIZ.
- Batteries, fuses, bulbs, engine oils and related labor.
- Improper installation, placement in harsh or saltwater environments, improper installation, rusting steel enclosures where paint integrity is compromised.
- Units sold, rated or used for "Trailer Mounted" or "Rental Unit" applications as defined by GO-BIZ.
- Excess time, holiday or emergency, overtime labor costs for repairs made outside of normal business hours.
- Incidental, consequential or indirect damages resulting from delay in repairing or replacing any defective part(s).
- Malfunctions occurring due to a service operation or external reasons that are not under the defined GO-BIZ control.

THIS WARRANTY IS IN LIEU OF ALL OTHER WARRANTIES, EXPRESS OR IMPLIED. SPECIFICALLY, GO-BIZ MAKES NO OTHER WARRANTY OF MERCHANTABILITY OR FITNESS FOR A PARTICULAR PURPOSE. WARRANTIES PERMITTED BY LAW SHALL BE LIMITED TO THE DURATION OF THIS WARRANTY. GO-BIZ'S LIABILITY SHALL BE TO REPAIR OR REPLACE PARTS AS SET FORTH ABOVE. GO-BIZ IS NOT LIABLE FOR FAILURES OR DAMAGES DUE TO USER NEGLIGENCE.

THIS WARRANTY GIVES YOU SPECIFIC LEGAL RIGHTS. YOU MAY HAVE OTHER RIGHTS UNDER APPLICABLE LAW.

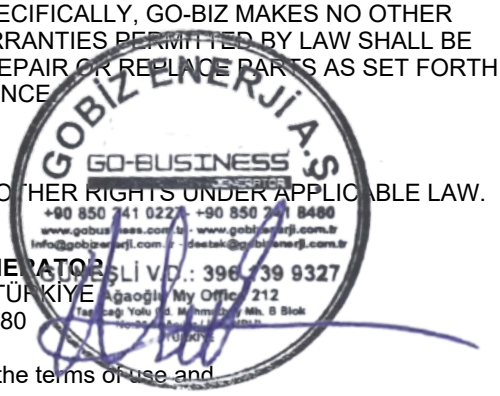

GOBIZ ENERJI A.S. GO-BİZ GO-BUSINESS JENERATÖR
34218 AGAOGLU MY OFFICE 212 İSTANBUL / TÜRKİYE
Tel: +90 (850) 241 0227 - +90 (850) 241 8480
info@gobizenerji.com
To find your nearest GO-BIZ Solution Partner and download the terms of use and maintenance, visit our website:
www.gobusiness.com.tr www.gobizenerji.com

GOBİZ ENERJİ A.Ş.
Ağaoğlu My Office 212 B Blok No:28
Taşocağı Yolu Cad. Mahmutbey Mah. Bağcılar / İSTANBUL
BUSINESS-SERVICE + 90 850 241 8480
SALES AND RENTAL:+ 90 850 241 0227 servisdepartman@gobizenerji.com
satisdepartman@gobizenerji.com
www.gobizenerji.com