GOBİZ®
JENERATÖR

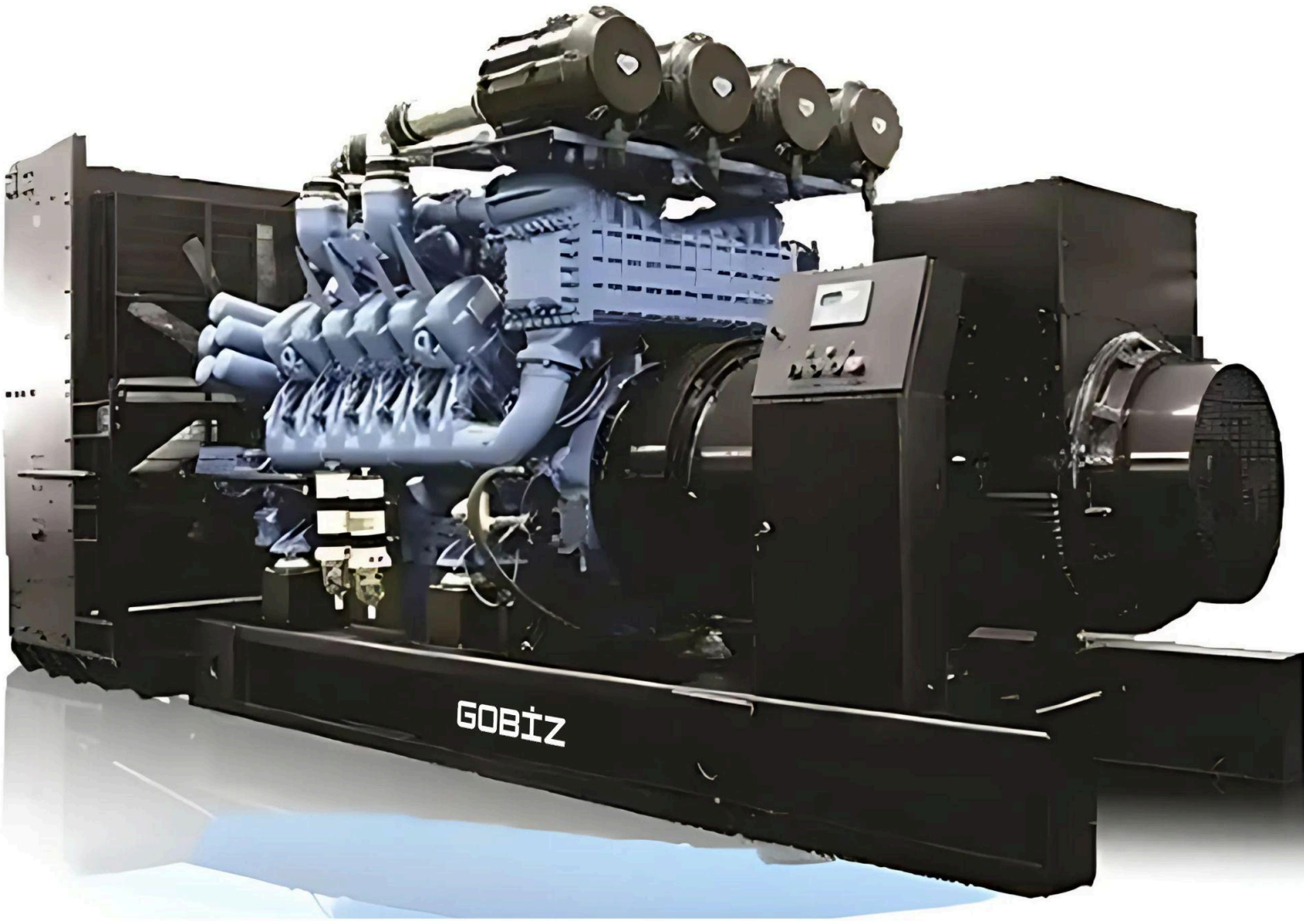

DIESEL GENERATOR MAINTENANCE AND OPERATION MANUAL

Dear GOBİZ Generator Users,

As GOBİZ Generator, we are happy to present you this guide for the safe and efficient operation of your generator set. This manual contains basic information and instructions to guide you through the correct transportation, installation, use and maintenance of your generator.

Before using your generator set, please read the manual carefully and follow the instructions correctly. This is extremely important to ensure the safety of both you and those around you.

GOBIZ Generator sets are designed to produce electricity in accordance with the environmental and operating conditions specified or agreed upon in your contract. In case of any change in operating and/or environmental conditions, please contact GOBİZ Generator or the authorized institutions.

Remember that in order to use your generator in the most efficient way, periodic maintenance should be done at recommended intervals and by competent people. In this regard, you can get information about periodic maintenance contracts by contacting GOBİZ Generator or authorized services.

Your generator is covered by the hour/year warranty specified in the contract (may vary depending on the generator sets) within the country borders, within the framework of the conditions specified in the warranty certificate. Unauthorized modifications, use of non-original spare parts and malfunctions caused by external factors will cause your generator to be out of warranty.

This guide addresses a wide range of products. When updates are made to the specified instructions and safety standards, you can contact GOBİZ Generator After-Sales Services Department.

In our efforts to continually improve and improve our products, we reserve the right to make changes to this manual. We hope you will use your generator set in healthy and beautiful days with uninterrupted energy.

GOBIZ ENERJI A.S.
Contact Information: info@gobizenerji.com - Whatsapp Support: 0850 241 0227
Company Title: **GOBİZ ENERJİ A.Ş.**
Tax Office: GÜNEŞLİ - Tax Number: 396 139 9327
Address: Taşocağı Yolu Cad. Ağaoğlu My Office 212 B Blok No:28 Mahmutbey Mah. Bağcılar / İstanbul - **TURKİYE**
Phone: 0850 241 0227 - 0850 241 8480
Web Address: www.**gobizenerji**.com - www.**gobusines**.com.tr

INTRODUCTION 6
1.1 Definitions About The Generator 6
1.2 Basic Electrical Concepts And Units 6
1.3 Classification of Generators According to Their Operation Time 8
1.4. ABOUT GOBIZ GENERATOR SET 9
SAFETY PRECAUTIONS 10
2.1 General 10
2.2 Lifting and Transport 11
2.3 Moving Parts 12
2.4 Hot Surfaces, Sharp Edges And Corners 12
2.5 Fire and Explosion 13
2.6 Toxic and Irritating Substances 14
2.7 Electric 15
2.8 Noise 16
2.9 First Aid in Electric Shock 17
GENERATOR SET AND PARTS 18
3.1 Diesel Engine 18
3.2 Alternator 18
3.3 Chassis and Fuel System 19
3.4 Lubrication System 20
3.5 Silencer and Exhaust System 21
3.6 Vibration Shocks 21
3.7 Battery 22
3.8 Battery Charge Rectifier 22
3.9 Engine Jacket Water Heater 23
3.10 Panels 23
3.10.1 Automatic Control Panel 23
3.10.2 Automatic Transfer Panel 24
3.10.3 Protection Switch Panel 24

SELECTION OF GENERATOR SITE AND INSTALLATION 25
4.1 Canopied Type Generator Layout 25
4.2 Open Type (Without Cabin) Generator Layout 26
4.3 Electrical Connections and Operation 28
4.3.1 Placement of the Transfer Panel 30
4.3.2 Starting the Generator 30
FAULT DETECTION 32
The Engine is Not Giving Enough Power 32
Oil Pressure Issues 32
Starter Motor Cannot Spin Diesel 32
Electronic Panel Does Not Work at All 33
Engine Temperature is Too High 33
The Engine Does Not Stop 33
Alternator Fault Detection 34
Alternator Voltage High When Loaded 34
Variable Voltage 34
Black Smoke is Coming Out of Exhaust 34
Engine Runs Erratically 35
Additional Checks 35
Automatic Voltage Regulator (AVR) Issues 35
MAINTENANCE OF GENERATOR 36
6.1 First Maintenance 36
6.2 200 Hours / Annual Maintenance 36
6.3 Periodic Maintenance 36
WARRANTY GOBIZ GO-BUSINESS GENERATOR 2 Year (1,000 Hours) Limited Warranty 37
MAINTENANCE TRACKING CHART 40

INTRODUCTION

1.1 Definitions About The Generator

Generators are complex electrical machines in which the chemical energy stored in fuels is first converted into mechanical energy with internal combustion engines and then into electrical energy through alternators. Generators can be diesel, gasoline, natural gas or hybrid depending on their fuel consumption. Diesel engines are widely preferred in generators used as utility backup. The main components of diesel generators consist of the diesel engine, radiator (cooling group), alternator, control panel, and chassis that containing the fuel tank up to a certain power.

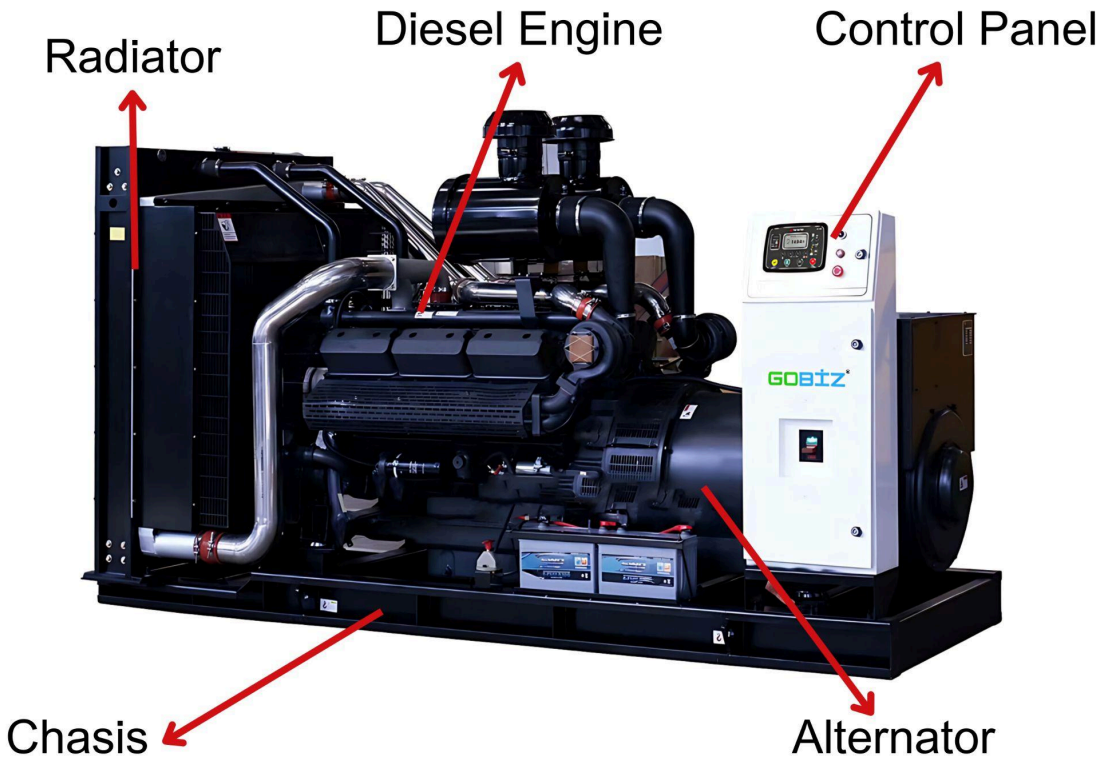

1.2 Basic Electrical Concepts And Units

Voltage (U): It expresses the potential of electrical energy, unit is volt. In low voltage systems in Turkey, phase-to-phase voltages is 400 volts, and the phase-to-neutral voltage is 230 volts. Voltage values may differ according to the utility infrastructure of the countries. The output voltage of diesel generators to be integrated into the system and the voltage of utility must be the same. Voltage is similar to pressure in mechanical concepts.

Current (I): The amount of charge of an electric particle passing through a unit surface in 1 second, and its unit is ampere. It varies according to the magnitude of the electrical charge. Current is similar to flow in mechanical concepts.

Direct Current (DC): Its direction and intensity do not change with time.



Direct Current

Alternating Current (AC): Its direction and intensity are variable with respect to time; it has two components: frequency and amplitude. Electric utilities and the generator systems that back them up provide alternating current.

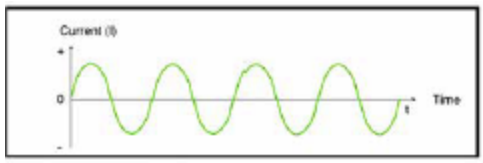

Alternation Current Wave

Frequency (Hz): The number of times an alternating current wave (sine curve) occurs in 1 second, and its unit is hertz. Frequency may vary as 50 Hz / 60 Hz according to countries. In Turkey, the utility frequency is 50 Hz.

Electrical Power Units:

- **Apparent Power (S):** The power representing the capacity and physical size of generators, transformers, and uninterruptible power supplies; its unit is kVA (kilovolt-ampere), which is the vector sum of active and reactive power.
- **Active Power (P):** Refers to the effective active power. The unit is kilowatt (kW). Electric motors and other mechanical systems are referred to in kilowatts.
- **Reactive Power (Q):** It is the inactive power component caused by the phase difference between current and voltage in electrical circuits containing coils or capacitors; its unit is kVAr (kilovolt-ampere reactive).

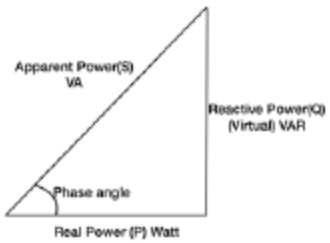

Power Triangle

1.3 Classification of Generators According to Their Operation Time

Standby Power (ESP – Emergency Standby Power)

Emergency Standby Power (ESP): It is the situation where the generator is used as a backup energy source and operates intermittently under variable loads; at the same time, it also refers to the maximum power that can be obtained from a generator. Generators cannot be loaded above standby power; they are limited to 200 hours of work per year. In practice, the most common use of diesel generators is standby applications.

Limited Time Running Power (LTP): This is the case when a standby generator is allowed to operate up to 500 hours per year as needed (e.g., hospital) as a utility backup. However, the expected maintenance period should be decreased under such working situations.

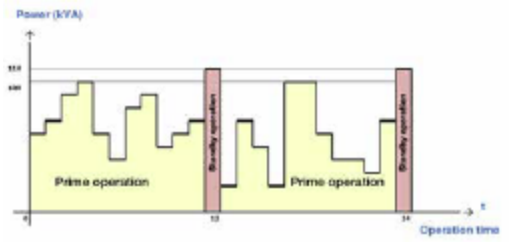

Prime Operation

Prime Power (PRP): It is the situation in which the generator works continuously under variable loads; it can operate continuously under variable loads for 365 days a year and 24 hours a day. It is recommended to choose according to prime power in locations where there is no utility energy. The generator may be allowed to be loaded 10% more than prime power for 1 hour at any time interval in 12 hours of period.

Continuous Power (COP): It is the state of continuous operation of the generator under constant load; it can operate continuously under 100% load for 365 days a year and 24 hours a day. In reality, it is not common practice for diesel generators due to operating costs; it is mostly valid for units with natural gas engines or turbines. Continuous power is the power selection criterion in applications that provide combined heat and power generation in applications such as cogeneration and trigeneration; it is 20% lower than the prime power.

1.4. ABOUT GOBIZ GENERATOR SET

As a result of the knowledge and experience gained since 2015, GOBIZ Generator groups have been designed with the aim of providing sustainable performance by keeping all kinds of life and property safety at the forefront. There is a “GOBIZ generator set identification label” as shown in the below picture on the chassis and/or cabinet of your generator set. This label contains information about your generator’s manufacturing year, voltage, current, power, frequency, power factor, weight, motor, and alternator. You can easily get your service, spare parts, and technical support requests that you send to our factory or authorized services by using the reference information on the generator set identification label.

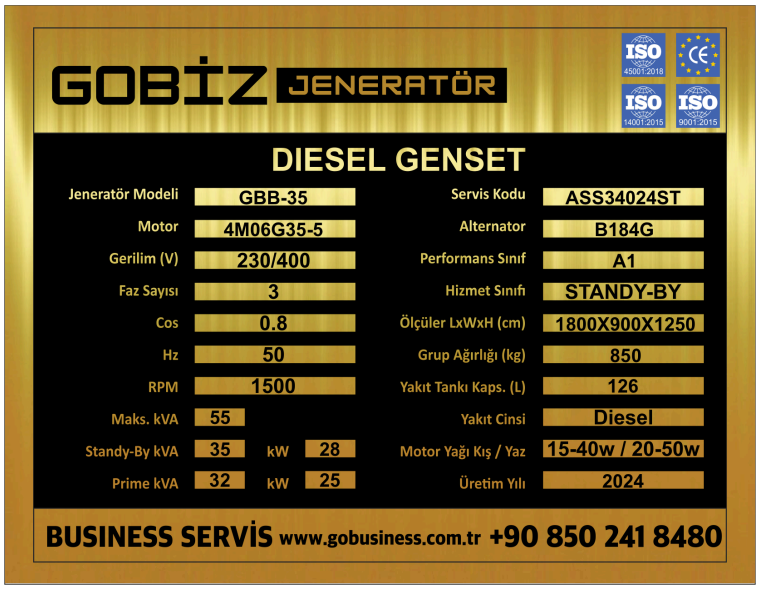

SAFETY PRECAUTIONS

2.1 General

The generator set must be installed, operated, and safety precautions must be followed in accordance with the maintenance and user manual. The generator set will serve safely only in this way.

Safe operation responsibility of the generator set belongs to the people who install, use, and maintain the generator set. When the safety precautions are followed, the risk of accidents will decrease. The generator set should be used by people who have been trained or authorized in this area, and who have read and understood the maintenance and user manual.

Failure to follow the rules, instructions, methods, and safety precautions in this book may increase the probability of malfunction, accident, and injury; it may even result in death. Personal protective equipment should be used during manual operation and periodic maintenance or controls of the generator.

When the generator is in automatic (AUTO) position, taking into account that the engine can start and activate automatically at any time, unauthorized access to the generator site should be prevented.

Attention should be paid to the labels and warnings on the generator set. The generator set must be installed and operated in strict accordance with applicable standards, rules, and regulations.

Before performing maintenance, repair, or adjustment, the generator set should be turned OFF and precautions should be taken against the intervention of others.

Do not operate the generator set unless it is safe. In unsafe situations, immediately attach a danger warning sign on the generator set to prevent damage to other person/persons, disconnect the battery terminals and disconnect all cable connections and disable the generator set. This book and its supplements should be considered as a whole. Safety precautions are provided in the relevant chapters of this book.

Do not neglect to consult the GOBİZ Generator or authorized services for incomprehensible issues.



READ THE USER'S MANUAL



USE INSULATED GLOVES WHILE WORKING THE PANEL



USE WORK GLASSES

2.2 Lifting and Transport

Use the lifting lugs on the chassis to lift the generator set. Do not lift from the lugs on the engine and alternator.

Absolutely ensure the necessary checks for the lifting lugs or connection points before lifting, against welding cracks, ruptures, bending, cracks, rusted or lost quality parts, loose bolts and nuts.

Make sure that all lifting equipment and support materials are workable and will withstand a weight of at least 10% more than the gross weight of the generator set. Make sure that the lifting hook or locks are functional safety latches and are properly connected.

When the machine is lifted off the ground, use guide ropes or equivalent to prevent it from turning and shaking. Do not try to lift the generator set under strong winds.

When the generator set is suspended, keep the operator of the lifting device always in place and ready. Place the generator set on flat surfaces that allow more than 10% of its gross weight and have a bearing capacity and are not at risk of slipping. Make sure that the personnel are out of the generator set before closing and locking the doors.

Canopied type generators should be lifted from the chassis, not from the lugs on the cabin. In order to prevent the generator from being damaged during lifting, the ropes should be tied to the eyebolt of the crane with an apparatus (sling).

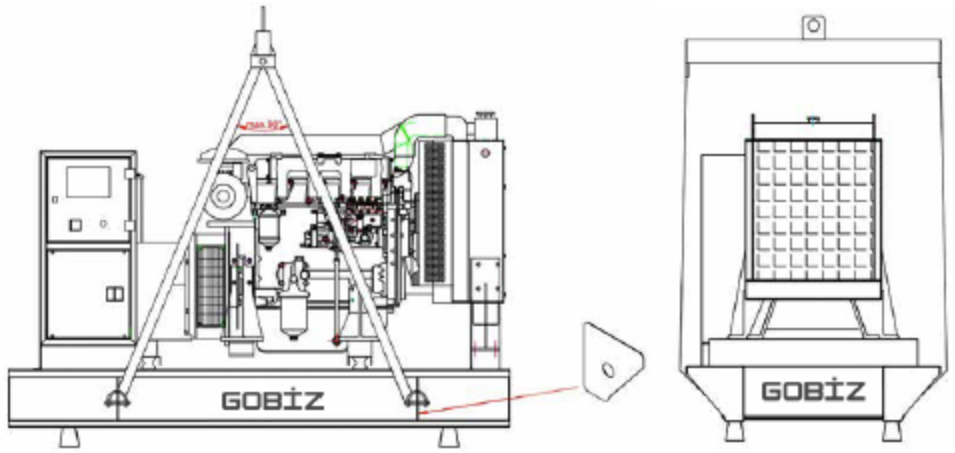

Generator Lifting and Transport

2.3 Moving Parts

Keep your body, especially hands, arms, hair and clothing away from propellers, belts, pulleys and other moving and rotating part. Do not attempt to operate the generator set while the fan and other guards are removed.

In case of working around the generator set or in front of moving parts, wear tight clothes and collect your long hair. Keep the access doors closed except for checking, maintenance, repair, adjustment, service, and starting or stopping the generator set.

Ensure that all personnel are at a certain safe distance from the generator set when it is started or out of service. In order to minimize the possibility of slipping and falling, keep your hands, feet, ground and walking areas clean from fuel, oil, water, antifreeze or other liquids.



ATTENTION! STAY AWAY FROM OVER HEAD LOADS !



ATTENTION! MOVING PARTS

2.4 Hot Surfaces, Sharp Edges And Corners

Avoid body contact with hot oil, hot coolant, hot surfaces, sharp edges and corners.

Protect all parts of your body from hot exhaust pipes and gases.

When working inside, outside or around the generator set, wear protective clothing such as gloves, boots and helmets.

Keep the first aid book handy. In case of injury, seek medical assistance immediately. Do not neglect minor and cut injuries.



ATTENTION! HOT SURFACE



ATTENTION! SHARP EDGE

2.5 Fire and Explosion

Refuel in accordance with the usage and norms from a fuel tank or service station designed for the purpose of use.

If fuel, oil, battery electrolyte or coolant buildup accumulates on the ground, clean them with sawdust or absorbent products. Before adding fuel, checking the electrolyte level of the batteries or changing the oil, turn off the generator set and allow it to cool down. Keep sparks, flames and other sources of ignition away from the generator.

Do not smoke around the generator and do not allow smoking in the vicinity. Do not allow the formation of fuel or oil film on the generator set, on the chassis or in the cabin if any. Wipe dirty surfaces using a liquid industrial cleaner.



ATTENTION! DANGEROUS FLAMMABLE MATERIAL



ATTENTION! EXPLOSIVE GASES



FORBIDDEN TO USE OPEN FLAME



NO SMOKING

Do not use flammable chemicals for cleaning. Before connecting or disconnecting the battery, turn off or disconnect the connection to the battery charger.

Before starting repair or maintenance on the battery and its surroundings, disconnect the battery negative (-) pole. Put a danger warning sign on the battery connector to prevent others from reconnecting in any way.

Keep electrical cables, battery terminals and other terminals in good condition. If there is any cracked, cut or corroded cable, insulation in bad condition, or worn, discolored or rusted terminal, replace it with a new one.

Be sure to ground the bodies of conductive objects that exposed to draft, such as electrical materials and terminals, in order to prevent them from creating an ignition source by arcing.

Do not attempt to weld or repair damaged fuel tanks or pipes, replace them with a new one. If any leakage is detected in the fuel system, do not start the generator set and eliminate the leak.

Do not forget that the temperature of the exhaust gas, exhaust manifold and exhaust outlet is around 550 ° C, insulate the hot surfaces, do not approach these areas without making sure that the system is cool down, and avoid the contact of flammable materials with these areas.

2.6 Toxic and Irritating Substances

Inhaling engine exhaust gases is dangerous to humans. The exhaust gases of all generators in closed spaces must be disposed of in unmanned areas by means of sealed pipes in accordance with the relevant standards. Hot exhaust silencer and exhaust pipe should be kept away from flammable materials and should be protected for the safety of personnel. Do not operate your generator in closed areas with exhaust gas leakage.

Install and operate the generator set only in open or well-ventilated areas.



ATTENTION! TOXIC AND IRRITATING SUBSTANCES



ATTENTION! IRRITATING SUBSTANCES

Before starting the welding process, remove heat-damaged or flammable materials from the environment. Keep oily rags, chemical waste, leaves, garbage or other flammable materials away from the generator set.

Keep ABC class fire extinguishers close to the place where the generator set is located and check their occupancy routinely (at least once a year).

Do not let leaves and branches come into contact with the hot exhaust system of the generator set used in wooded and forested areas.

Do not attempt to install or operate generator sets in hazardous areas.

Inside the cabinet of cabin type generators and when open type generators are installed in a low ceilinged room, it is recommended to make heat insulation with rock wool and aluminum embossing or heat insulation jacket in order to prevent possible contact with the exhaust system.

Make sure that the exhaust gas outlets are not given to personnel areas and places where there is a danger of going to these areas or near to air suction ducts.

Fuels, oils, cooling fluids and battery electrolytes used in the generator set are industrial types; Necessary precautions should be taken to prevent accidental ingestion or skin contact. If it penetrates into the body, seek medical assistance immediately.

In case of contact with the skin, wash the contact area with water and soap.

While maintaining the batteries, wear an acid-proof apron and use a face protective mask or goggles. If the electrolyte has spilled on the skin or clothing, clean it immediately with plenty of water.



ATTENTION! ELECTRIC HAZARD

2.7 Electric

The wiring of the generator set should be made only by trained and authorized qualified electricians.

Make sure that the electrically powered parts of the generator set do not come into direct contact with the body or any uninsulated conductive object.

Before making all cable connections, dismantling and operating the generator set, make sure that the grounding has been done in accordance with the applicable regulations.

While the generator sets are standing in water or on wet ground, do not attempt to start the generator; Do not attempt to connect or disconnect the generator from the electricity.

Before making or removing the electrical connections of the generator set, stop the engine, disconnect the supply of the battery charger and the battery connection. Disconnect the ungrounded conductor connections on the load side and leave them outside.

Prevent the direct contact of any part of your body with the moving parts of the electrical system on the generator set or indirectly through any hand tool or other conductive object. In the adjustment and repair of the electrical system of generator set, and stand on insulating surfaces with dry litter.

Re-install the generator set electrical connection terminal cover as soon as possible when the connections are made or removed; otherwise, do not operate the generator set.

When the generator set is out of service, lock and close all access doors of the generator.

Keep the towing vehicle or equipment carriers at least 3 meters away from electric cables and buried power cables connected to the generator set.

Perform repairs in clean, dry, well-lit and well-ventilated areas.

Connect the generator set only to receivers that comply with the electrical characteristics and are within the specified power capacity limit. Make electrical connections with conductors within the current carrying capacity limit in accordance with their norms.



EARMUFFS

2.8 Noise

The sound intensity of diesel generators that are not equipped with a sound insulation cabin is between 90 - 110 dBA at a distance of 1 meter. Prolonged exposure to sound intensity of more than 85 dBA is dangerous to hearing.

For indoor generator sets, acoustic measurements should be made after installation and appropriate protective measures should be taken if necessary.

Earmuffs must be used while working at the generator site.

2.9 First Aid in Electric Shock

First of all, turn off the electricity immediately, do not touch the casualty with bare hands until the energy is cut off. If it is impossible, protect yourself with dry and non-conductive objects and completely remove the casualty from the conductor. Then follow the steps below in order:

a) Call the nearest health facility and seek medical assistance.

b) Lay the patient face down, with his head facing to one side and his head on his hands.

c) Remove objects from the patient's mouth such as dentures, tobacco, gum. Press firmly between the shoulders of patient's with the help of the palm of your hand. Make sure the tongue rests freely.

d) Kneel with one knee at the patient's head and the other foot at the patient's elbow.

e) Place the palm of your hands on the patient's shoulder and shoulder blades.

f) Push forward with your arms in a vertical position. Pressure should be light and provided without force (About 10-15 kg). Stay this way for 2.5 seconds.

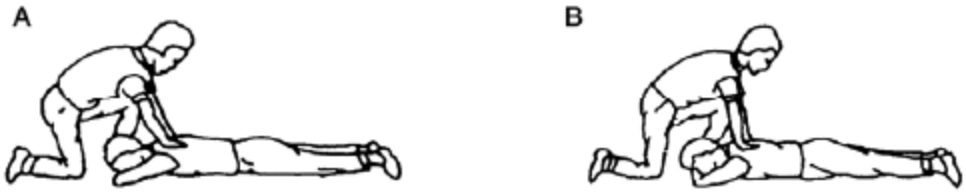

g) Release the pressure with your hands by sliding it over the patient's shoulders to the elbows (approximately 1 second). Following this, gently lift the patient's arms and shoulders by holding the elbows, and simultaneously stretch them back for about 2-3 seconds. Lower the patient's arms and bring your hands back to the patient's shoulder blade.

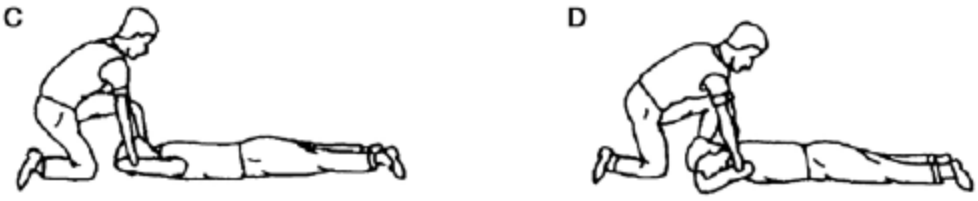

h) Repeat the steps so that each complete breath takes seven seconds.

i) While the artificial respiration is maintained, another person should assist in loosening the patient's clothing and keeping the patient warm.

j) If the patient stops breathing, continue for artificial respiration. Four hours or more time may be needed.

Do not give fluid until the patient regains consciousness.

GENERATOR SET AND PARTS

3.1 Diesel Engine

Go-Business Generator uses heavy-duty diesel engines produced for generators that do not need to be modified in international standards.

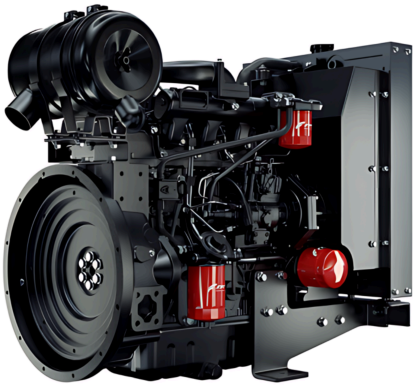

Engines with the following characteristics are used in the generator sets: precise speed regulation, low fuel consumption, four-stroke, atmospheric or turbocharged depending on power, mechanical or electronic governor according to power, water-cooled.

The electrical system of the diesel engines used is 12V or 24V direct current. One battery in generator groups with 12V electrical system and two batteries in groups with 24V, battery stand and connection cables are provided with the generator. Diesel engines are designed to operate safely and their filters are replaceable.

3.2 Alternator

Alternators used in Go-Business Generators have the following standards: single bearing, self-cooling, brushless, IP 21 and IP 23 protection standards. It is highly efficient, precisely regulated, and self-warning as standard. Optionally, different voltage and frequency levels, dehumidifying winding heaters, and thermal sensors can be provided.



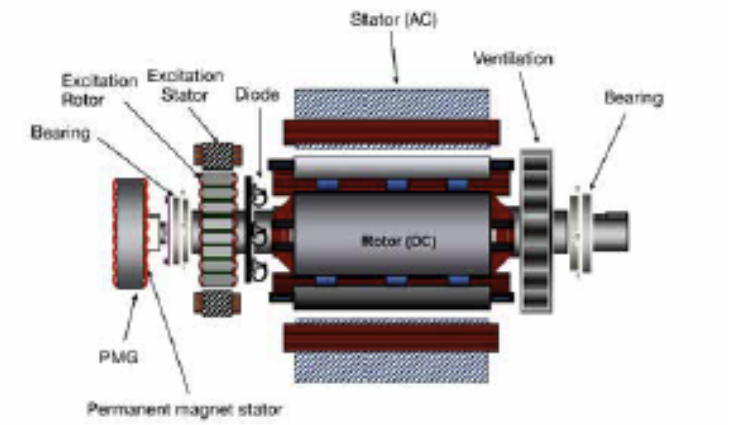

3.3 Chassis and Fuel System

The daily fuel tank of GOBİZ Generators is in the chassis up to 1125 kVA standby power and is designed to operate for 6 - 8 hours at full load. The fuel suction and return connections of the generator are made and there is a mechanical and electronic fuel level indicator in the tank. An opportunity is provided for tank cleaning by using the fuel drain plug.

Fuel temperature is an important factor for proper operation. High fuel temperature decreases the heat content per volume and engine output power due to expansion.

Prismatic or cylindrical external fuel tanks are used above 1125 kVA standby power. For long service periods, main fuel tanks should be installed in addition to the daily fuel tank.

The connecting pipe from the main fuel tank to the daily fuel tank should be at least same size with daily tank feed pipe section or more. Fuel pipes should be black pipes, galvanized pipes should not be used.

The fuel used must be clean, there should be no water and corrosive liquids in the fuel. Otherwise, malfunctions may occur in the injector, fuel pump and actuator.

After filling the fuel tank and waiting for a while, it is recommended to drain the water and sediment that collection pan until the fuel flows. Hazardous wastes such as engine oil, antifreeze and fuel should be sent to authorized disposal companies.

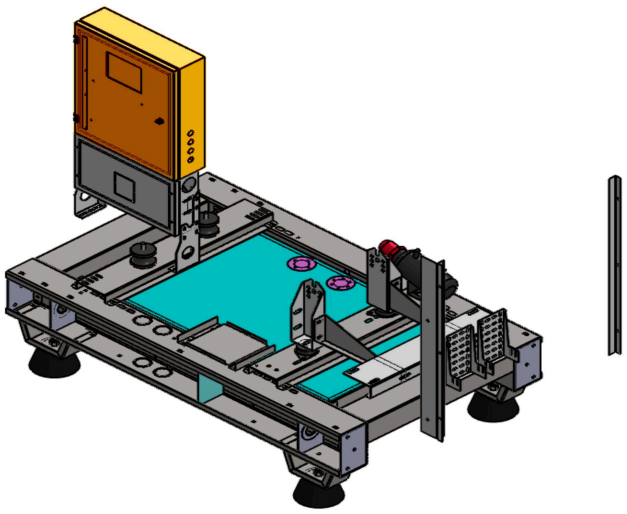

3.4 Lubrication System

The lubrication system of diesel engines is one of the most important parts of the engine. It ensures smooth operation of all moving parts in the engine and cooling of the engine at the same time. Correct engine maintenance (paying attention to oil change periods, filter change periods and the properties of the oil used) extends the life of the engine and reduces the operating cost of the engine.

Engines are lubricated with oils that form a protective layer between moving parts, such as bearings and piston rings/cylinder groups, by pumping oil to critical points of the engine by the oil pump. This oil layer separates metal surfaces from each other and reduces friction. By pumping oil into the engine, it is possible to maximize the power of the engine and reduce friction losses by reducing the friction between moving parts of the engine.

The word viscosity describes how easily an engine oil flows.

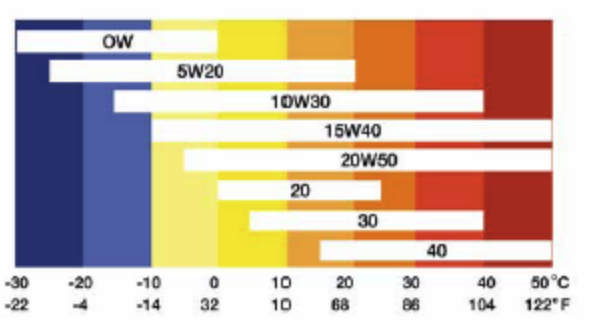

Engine Oil Types According to Climatic Conditions

The viscosity of an oil is defined as its resistance to flow. Two numbers are used to describe the oil viscosity. The first number ends with the letter 'W' which means "Winter". This value shows the fluidity when the engine is first started and the oil is still cold. The second number is defined as the new fluidity of the oil after the engine reaches its normal operating temperature.

The smaller the number, the higher the fluidity. In other words, a 5W-30 oil used in the first start-up moments of the engine flows more easily than 10W-30 oil. At normal operating temperatures of the engine, a 10W-30 oil flows more easily than a 10W-40 oil. This change is important because the engine cools when stopped and the engine oil naturally thickens when it cools and becomes thinner with temperature.

Thin or low viscosity oils flow more easily to protect engine parts at low temperatures. Thick or high viscosity oils are better at maintaining the durability of the film to protect the engine at high temperatures.

For engine oils to be used in extreme climatic conditions, the manufacturer confirmation must be obtained.

3.5 Silencer and Exhaust System



The purpose of the engine exhaust system is to transport the poisonous gases and exhaust fumes, which are burned in the engine, out of the room without causing danger or discomfort, and to reduce the noise.

To reduce the noise level of the engine, a suitable exhaust silencer must be installed in the exhaust outlet line.



- Exhaust pipes should be supported by surrounding structures so that the exhaust pipes do not weigh on the engine exhaust manifold and turbocharger outlet.
- The weight of the exhaust system should be given to the building. Steel construction or tension elements can be used for this task to carry the load to the ceiling or floor.
- Flap-type counter-weighted rain covers can be used in various applications to prevent rain from entering the open exhaust outlet.
- The exhaust outlets of more than one generator should not be combined using a single exhaust pipe.
- The turns in the exhaust installation should be made with circular radius patent elbows. It is not appropriate to make an elbow by cutting and welding the two pipes by joining them with 90 °.
- Exhaust pipes should be as short and straight as possible to reduce back pressure.
- A flexible connection (compensator) should be placed between the exhaust manifold and the exhaust pipe system to prevent engine vibration from being transmitted to the exhaust pipe system and the building.

3.6 Vibration Shocks

Vibration shocks are used at the connection points of the engine-alternator set to the chassis and between the chassis and the ground in order to prevent the vibration on the ground and the loosening of the generator parts when the generator is running. Vibration shocks are selected according to the weight of the machine in order to minimize the vibration and use it without problems for a long time.



Rubber Vibration Shock (Standard)



Steel Spring Vibration Shock (Optional)

3.7 Battery

Lead acid type batteries supplied with Go-Business Generator sets provide the electrical energy required for the starter motor and the control panel to feed during the first start of the engine. Batteries should be placed on battery stands as close to the generator as possible.

Batteries with low charge do not start well in cold weather. This is because more power is required to activate the cold motor.

Over time, oxidation may occur at the battery terminals and connection points.

Oxidation will corrode the battery terminals and prevent charging. Therefore, the daily control and maintenance of the battery is very important.



Battery

3.8 Battery Charge Rectifier



The charge levels of the batteries that store the electrical energy required for the generator control system and starter motors at any time may decrease while in standby. For this reason, “buffer battery charging rectifiers” are used, which are supplied with utility energy and located in the control panel.

The rectifiers can be of different values with 12 VDC or 24 VDC output depending on the voltage value of the motor installation.

3.9 Engine Jacket Water Heater



It is important that the generator motor in standby state should be warm during the initial start and load phase. In order to achieve this, “motor jacket water heater” fed by utility energy is used.

These heaters heat the engine cooling water in a thermostatically controlled manner, ensuring that the engine body is constantly at the specified temperature. When the generator is running, the heater is switched off.

Since the water capacity in high-power generator motors is high, water circulation pumps provide faster circulation of heated water in the engine body in order to provide more effective heating.

3.10 Panels

3.10.1 Automatic Control Panel

Electronic control modules are used to control and monitor the generator operation. Automatic or manual selections are provided in standard control systems according to usage needs. The control panel mounted on the generator chassis monitors the utility and enables monitors the start, stop, running status and output value of the generator when necessary. In addition, it automatically stops the generator in case of low oil pressure, high engine temperature and other malfunctions.

Before starting the generator, the user should be familiar with the operation of the control panel and the duties of the elements on it. While the generator is running, the visuals on the panel should be observed from time to time. Thus, the generator can be intervened before problems occur in extraordinary situations.







Automatic Control Panel

GOBIZ®

3.10.2 Automatic Transfer Panel



In automatic generators, automatic transfer panels are used in order to transfer the load between the utility and the generator. Automatic transfer systems are integrated at the bottom of the control panel in Go-Business Generators that standby powers are up to 75 kVA.

For the generators that powers are greater than 75 kVA, external (wall-mounted / free-standing) transfer panels are used. Automatic transfer panels can be provided with 3 poles (3P) and 4 poles (4P) optionally.

For the installations with residual current relays, 4P transfer systems should be used to prevent faulty trips.

3.10.3 Protection Switch Panel



Thermal magnetic switches are used to protect the generator operating under load against possible overload and short circuit. Protection switches can be provided with 3 poles (3P) and 4 poles (4P) as an option. The working principle of the automatic transfer panel is shown in the diagrams below.

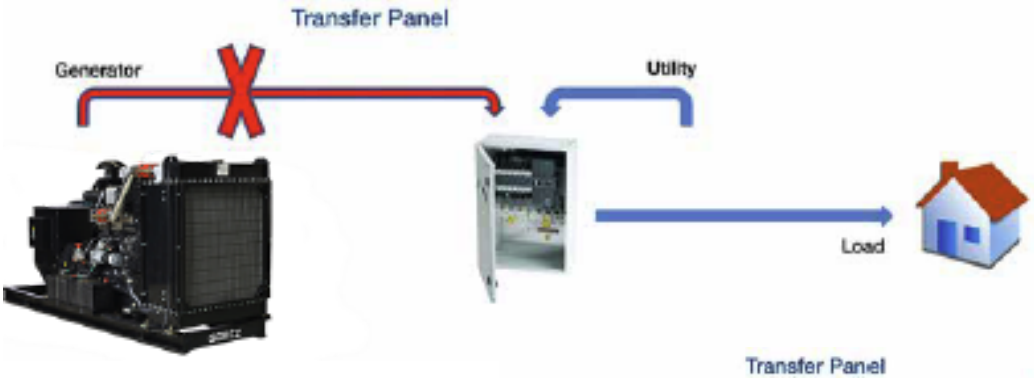

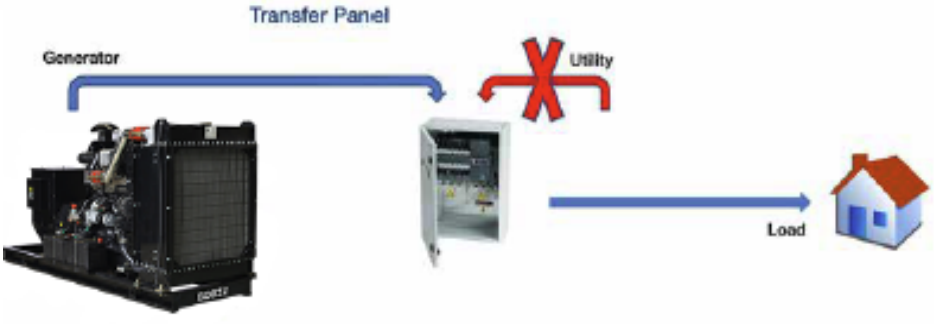

SELECTION OF GENERATOR SITE AND INSTALLATION

The selection of the place where the generator set will be installed is very important for the high performance and safe operation of the generator. There should be sufficient ventilation where the generator set will operate. It must be protected against elements such as rain, snow, hail, flood water, sunlight, freezing cold, extreme heat, sandstorm and snowstorm. It must be protected against harmful airborne substances such as dust, oil fumes, steam that corrode or provide conductivity.

The generators are classified under two options according to their place for installation:

1. Open (without cabin) type
2. Canopied type

4.1 Canopied Type Generator Layout

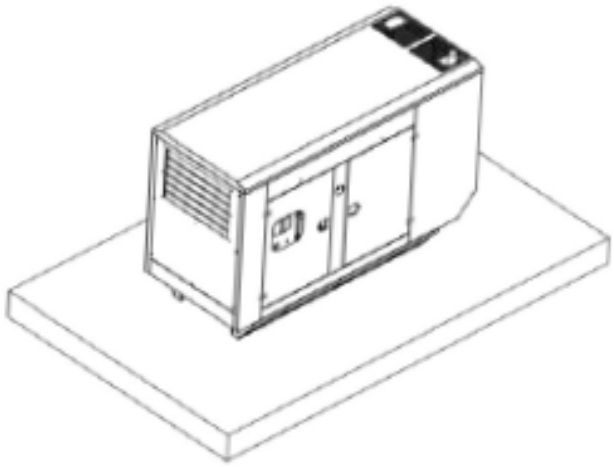

4.2 Open Type (Without Cabin) Generator Layout

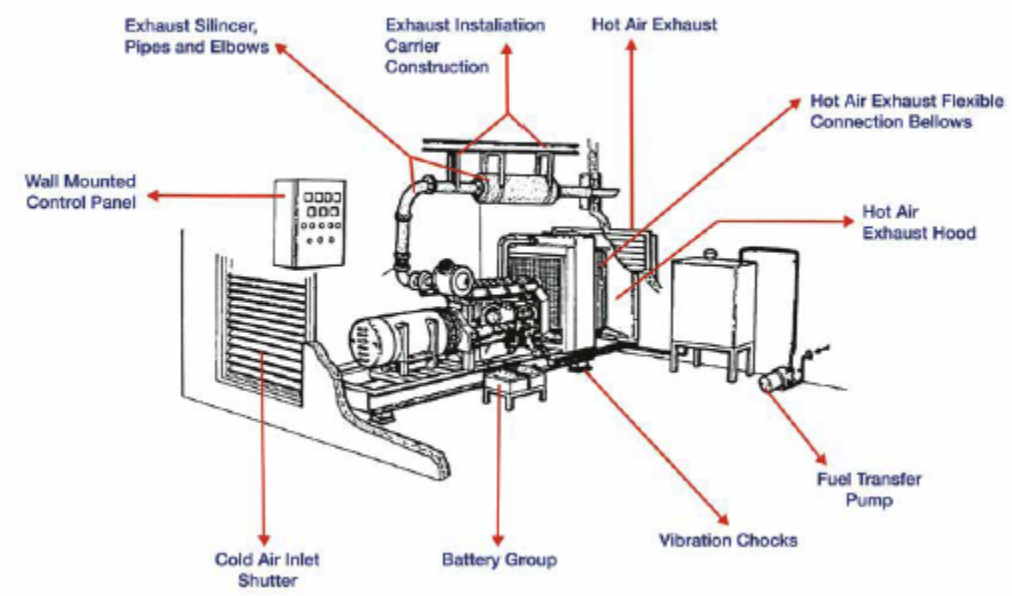

Open Type Generator Layout Example

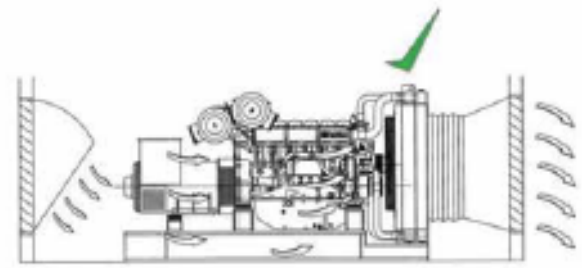

Proper Air Flow

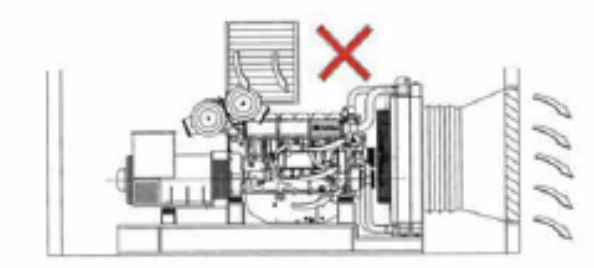

Improper Air Flow

Notes:

- For distances longer than 50 meters, the voltage drop should be calculated and the recommended cable sections should be confirmed.

- In case the generator energy output is projected with a busbar installation instead of a cable, the alternator output should never be directly connected to the busbar line, the alternator output should be connected to the busbar interconnection box with cable or flexible busbar.

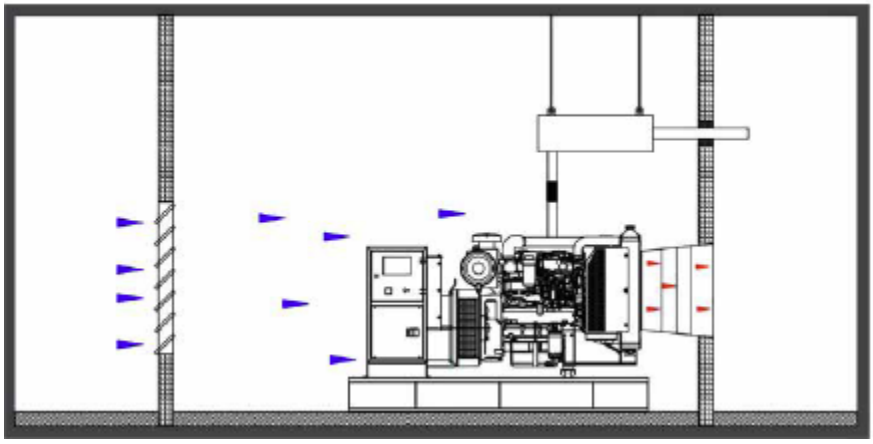

Generator Room Ventilation at the Same Level (Elevation) with Outdoor Environment

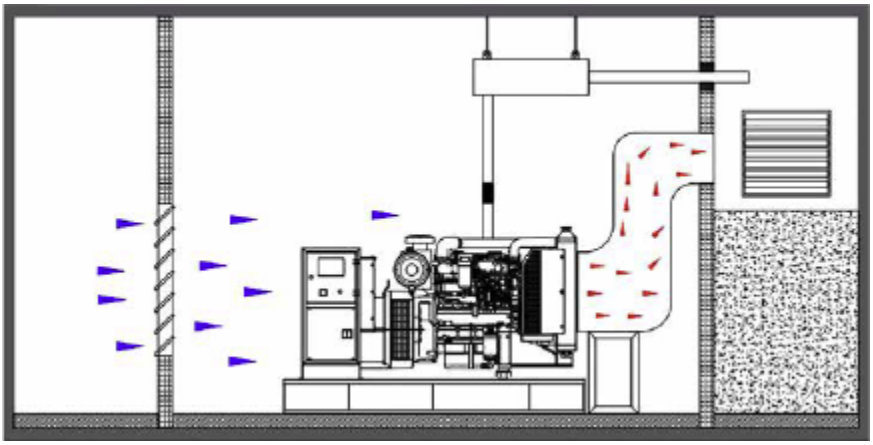

Generator Room Ventilation in Basement

4.3 Electrical Connections and Operation

The generator's electrical connections should be performed by qualified and trained persons and ensure that the safety precautions in section 2.7 are followed.

Power cables of the generator set should be calculated according to the load current, the operating voltage and the voltage drop that may occur in the distance between the load and the generator. The generator and transfer panel should be placed in a way that make cables as short as possible. In 3-phase systems, the phase sequence should be followed in the current utility connection, and after the generator connections are made, the phase sequence should be checked before the generator power is supplied to the load.

In order to provide generator - utility transfer, a 3-position changeover switch (1 -0-2) should be used in manual models, and an automatic transfer panel should be used in automatic models.

The generator set and the transfer panel must be grounded before commissioning. The generator should not be operated without grounding installation. Grounding is useful for protecting people against electrical hazards and for the efficient operation of electronic control devices.

Grounding is done by burying the copper electrodes of appropriate size and amount in the ground, and using copper conductors with appropriate cross-sections to connecting them to the designated place in the body of the generator set.

Grounding resistance should be aimed to be at most 2Ω. Energy and grounding cable sections are given in the cable selection table according to the generator power. There should be a terminal on the generator and panel where the grounding cable will be connected. If there is no terminal and the cable will be connected to the body, the paint of the place where the cable lug will contact should be scratched for ground continuity.

Table: Cable Selection Table

POWER				CABLE		
GENERATOR POWER (STANDBY) kVA	OUTPUT VOLTAGE (PHASE-PHASE) V	CosØ	NOMINAL CURRENT A	CABLE TYPE	CABLE SECTION (3 PHASE+NEUTRAL) mm²	GROUND SECTION mm²
12	400	0,80	17	NYY	4x2,5	1x6
15	400	0,80	22	NYY	4x4	1x6
22	400	0,80	32	NYY	4x6	1x6
27	400	0,80	39	NYY	4x10	1x10
33	400	0,80	48	NYY	4x10	1x10
45	400	0,80	65	NYY	4x16	1x10
55	400	0,80	79	NYY	3x25+16	1x10
75	400	0,80	108	NYY	3x35+16	1x10
88	400	0,80	127	NYY	3x50+25	1x10
110	400	0,80	158	NYY	3x50+25	1x25
125	400	0,80	180	NYY	3x70+35	1x25
150	400	0,80	216	NYY	3x95+50	1x25
175	400	0,80	252	NYY	3x120+70	1x25
200	400	0,80	288	NYY	3x150+70	1x35
225	400	0,80	324	NYY	3x185+95	1x35
250	400	0,80	360	NYY	2x(3x70+35)	1x35
275	400	0,80	396	NYY	2x(3x95+50)	1x35
300	400	0,80	432	NYY	2x(3x95+50)	1x50
330	400	0,80	475	NYY	2x(3x120+70)	1x50
385	400	0,80	554	NYY	2x(3x120+70)	1x70
400	400	0,80	576	NYY	2x(3x150+70)	1x70
450	400	0,80	648	NYY	2x(3x150+70)	1x70
500	400	0,80	720	NYY	3x(3x120+50)	1x70
550	400	0,80	792	NYY	3x(3x120+70)	1x95
600	400	0,80	864	NYY	3x(3x150+70)	1x95
660	400	0,80	950	NYY	3x(3x150+70)	1x95
715	400	0,80	1030	NYY	4x(3x120+70)	1x120
825	400	0,80	1188	NYY	5x(3x120+70)	1x120
900	400	0,80	1296	NYY	5x(3x120+70)	1x120
1000	400	0,80	1440	NYY	6x(3x120+70)	1x120
1125	400	0,80	1620	NYY	6x(3x120+70)	1x120
1250	400	0,80	1800	NYY	6x(3x150+70)	1x120
1385	400	0,80	1994	NYY	7x(3x150+70)	1x120
1500	400	0,80	2160	NYY	7x(3x150+70)	1x240
1650	400	0,80	2376	NYY	6x(3x240+120)	1x240
1900	400	0,80	2736	NYY	7x(3x240+120)	1x240
2050	400	0,80	2952	NYY	7x(3x240+120)	1x240
2250	400	0,80	3240	NYY	8x(3x240+120)	1x240
2500	400	0,80	3600	NYY	9x(3x240+120)	1x240

NOTES:

- For distances longer than 50 meters, the voltage drop should be calculated and the recommended cable sections should be confirmed.
- In case the generator energy output is projected with a busbar installation instead of a cable, the alternator output should never be directly connected to the busbar line, the alternator output should be connected to the busbar interconnection box with cable or flexible busbar.

4.3.1 Placement of the Transfer Panel

The points to be considered in the placement of the transfer panel are as follows:

- The transfer board should be clean, dry, well ventilated and away from excessive heat (cooled if necessary). When the ambient temperature exceeds 40 ° C, the capacity of the fuses and switches may decrease and they can open faster.
- There should be enough working space around the transfer panel.
- It is recommended to fix the transfer panel against seismic factors.
- The load to be connected to the generator should be distributed equally (symmetrically) to three phases as much as possible.
- The value of the current to be drawn from one phase should never exceed the nominal current value.
- If the transfer panel is separate from the generator, it is recommended to place it as close to the main distribution panel as possible. In this case, wiring costs can be saved.
- Energy cables of appropriate cross-section must be drawn from the generator and main distribution panel to the transfer panel. In addition, NYMHY (TTR) type control cable with a cross section of 7 x 2.5 mm^2 should be drawn from the generator control panel to the transfer panel.

4.3.2 Starting the Generator

Before starting the generator, make the final checks of the generator set by observing the necessary safety precautions:

- Check engine oil, fuel and coolant levels and replenish if necessary.
- Switch the fuses in the panel and the load output switch, if any, to the open (O) position.
- Bleed the fuel system with the manual fuel automatic on the engine.
- Check the battery level and make battery connection, first connect the (+), then connect the (-) pole.
- Turn off the fuses in the panel, and if the emergency stop button is pressed, turn it on by turning to the right.
- After the control panel is powered on, press the bulb test button to check the warning light.
- To run the generator in test mode without load, press the TEST button in automatic models and the START button in manual models.

- While the generator is in test mode, check the voltage, frequency, oil pressure and coolant temperature values.
- If the generator is required to be activated continuously, the control module will remain in the automatic (AUTO) position.

The generator control panel continuously controls the utility phases. The phase-neutral lower limit of the utility voltage is programmed as 180 volts and the upper limit as 250 volts. When the utility voltage goes out of these values or when the utility power is cut off, the generator starts automatically and the contactors/switches in the transfer panel change positions and take the load.

When the utility energy returns to normal, the automatic control panel monitors the utility energy for a while. If the utility energy is permanently at normal values, it first sends an opening command to the generator contactor/switch, then it transfers the load to the utility by closing the mains contactor/switch and turns off automatically after cooling operation.

Generator start delay, cranking time, number of consecutive starts and waiting time, transfer delay times and cooling time are parameters that can be adjusted on the control module.

There are status indicators and fault signals on the control panel. When one of the fault lamps turns on, it is understood that there is a problem with the generator set. In this case, the generator automatically stops and does not work. After the fault is resolved, reset the fault by pressing the OFF button on the control panel. Start the generator set in TEST mode and switch it to automatic (AUTO) mode. The generator will turn off automatically at the end of the set time.



Datacom Control Module (Standard)

FAULT DETECTION

The Engine is Not Giving Enough Power

1. Fuel pipe blocked: Check for obstructions in the fuel line and clear any blockages.
2. Fuel filter dirty: Inspect and replace the fuel filter if necessary.
3. Air filter dirty: Clean or replace the air filter.
4. Poor quality fuel: Ensure the fuel quality meets the required standards.
5. Exhaust pipe blocked: Clear any blockages in the exhaust system.
6. Fuel control faulty: Inspect the fuel control system and repair any faults.
7. Governor faulty: Check and adjust or repair the governor.

Oil Pressure Issues

Oil pressure is too low:

1. Oil viscosity is wrong: Use the correct viscosity oil as specified in the manual.
2. Problem with the oil pump: Inspect and repair or replace the oil pump.
3. Oil sensor malfunctioning: Check and replace the oil sensor if needed.

Oil pressure is too high:

1. Oil viscosity is wrong: Use the correct viscosity oil as specified in the manual.
2. Oil pressure indicator faulty: Check and replace the oil pressure indicator if necessary.

Starter Motor Cannot Spin Diesel

1. Fuel circuit has made air: Bleed the air from the fuel system.
2. Fuel control solenoid faulty: Inspect and replace the solenoid if necessary.
3. Fuel filter dirty: Clean or replace the fuel filter.
4. Heater not working: Check and repair the heater.
5. Poor quality fuel: Ensure the fuel quality meets the required standards.
6. Fuel control faulty: Inspect the fuel control system and repair any faults.
7. Injector faulty or out of adjustment: Check and adjust or replace the injectors.
8. Battery charge level low: Charge or replace the battery.

9. Battery cables have poor contact: Inspect and tighten battery cable connections.
10. Starter motor defective: Inspect and replace the starter motor.
11. Starter relay faulty: Inspect and replace the starter relay.

Electronic Panel Does Not Work at All

1. Measure the DC voltage from the terminals: Turn off all the fuses in the board, then turn them back on starting with the DC supply fuse and retest.

Engine Temperature is Too High

1. Exhaust pipe blocked: Clear any blockages in the exhaust system.
2. Cooling fan damaged: Inspect and repair or replace the cooling fan.
3. Radiator cores dirty or inside of pipe blocked: Clean the radiator cores and pipes.
4. Ventilation flow insufficient: Improve ventilation flow around the engine.
5. Water circulation pump defective: Inspect and repair or replace the water circulation pump.
6. Air filter or tube clogged: Clean or replace the air filter and clear any obstructions in the air tube.
7. Injectors defective or out of adjustment: Check and adjust or replace the injectors.
8. Heating system malfunction: Inspect and repair the heating system.

The Engine Does Not Stop

1. Fuel return hose may be crushed or kinked: Inspect and straighten the fuel return hose.
2. Valve installed in the fuel return line and remained in the closed position: Ensure the valve is in the open position.
3. Solenoid malfunctioning: Inspect and replace the solenoid if necessary.

Alternator Fault Detection

Alternator Voltage High When Loaded

1. Voltage adjustment potentiometer not adjusted: Adjust the voltage potentiometer correctly.
2. Automatic voltage regulator protection activated: Reset the automatic voltage regulator.
3. Automatic voltage regulator faulty: Inspect and replace the automatic voltage regulator.
4. Automatic voltage regulator cable connection broken: Check and repair the cable connection.
5. Diodes faulty: Inspect and replace any faulty diodes.

Variable Voltage

1. Engine speed variable: Check and stabilize the engine speed.
2. Automatic voltage regulator cable disconnected: Inspect and reconnect the cable.
3. Automatic voltage regulator out of adjustment or faulty: Adjust or replace the automatic voltage regulator.

Black Smoke is Coming Out of Exhaust

1. Air filter dirty: Clean or replace the air filter.
2. Bad quality fuel: Ensure the fuel quality meets the required standards.
3. Exhaust clogged: Clear any blockages in the exhaust system.
4. Low engine temperature: Ensure the engine reaches the proper operating temperature.
5. Valve setting wrong: Check and adjust the valve settings.
6. Injector settings wrong or malfunctioning: Check and adjust or replace the injectors.
7. Overload: Reduce the load on the generator.

Engine Runs Erratically

1. Fuel pipe blocked: Clear any blockages in the fuel line.
2. Fuel governor faulty: Inspect and repair the fuel governor.
3. Fuel filter dirty: Clean or replace the fuel filter.
4. Fuel pump malfunction: Inspect and repair or replace the fuel pump.
5. Air filter dirty: Clean or replace the air filter.
6. Air in the fuel system: Bleed the air from the fuel system.
7. Clamps of fuel hoses loose: Tighten the clamps of the fuel hoses.
8. Injectors faulty or not adjusted: Check and adjust or replace the injectors.
9. Valve adjustment bad: Check and adjust the valve settings.

Additional Checks

1. Generator grounding: Ensure the generator is properly grounded to avoid electronic instability.
2. Utility voltages: Measure phase voltages and ensure they are within programmed limits.
3. Utility voltage measurement: Verify that the device measures utility voltages correctly by pressing the MENU button.
4. Utility voltage limits: Ensure lower and upper voltage limits are set correctly (factory setting is 170/270 volts).

Automatic Voltage Regulator (AVR) Issues

1. AVR fuse blown: Inspect and replace the fuse.
2. AVR faulty: Inspect and replace the AVR.
3. Alternator diodes blown: Inspect and replace the diodes.
4. Diode malfunctioning: Inspect and replace any faulty diodes.

MAINTENANCE OF GENERATOR

6.1 First Maintenance

Engine oil, oil filters and fuel filters are changed during 50 hours or first running-in maintenance; The air filter is cleaned and replaced if necessary. The machine's electrical connections and indicators are checked. It is checked whether there is any oil, fuel and water leakage on the engine. Radiator and fuel system hoses and clamps and straps are checked.

6.2 200 Hours / Annual Maintenance

The operations performed in the first maintenance are repeated in the 200-hour maintenance. Battery maintenance is done, the tension of the belts is checked, if necessary, its gap is removed by stretching.

In addition to these maintenance, the water and antifreeze in the cooling system are completely drained and changed every 2 years.

6.3 Periodic Maintenance

Note: Whichever of working hours and time periods expires first applies.

WARRANTY GOBIZ GO-BUSINESS GENERATOR 2 Year (1,000 Hours) Limited Warranty

For Residential and Commercial Generators

If the device is successfully started and/or commissioned within the warranty period specified below, the GOBIZ GO-BUSINESS GENERATOR and/or transfer switch system will be free from defects in material and workmanship for the period specified below. If GOBIZ is found to be faulty after evaluation, inspection, and testing by GOBIZ or an Independent Authorized Service Provider, GOBIZ will repair it at its sole discretion. Equipment claimed to be defective by the buyer/owner must be evaluated by the nearest Independent Authorized Service Provider.

- The warranty begins at the moment of successful start-up and/or operational commissioning of the unit.
- The unit must be registered and proof of purchase must be provided. All warranty repairs and/or concerns must be performed and/or addressed by an Independent Authorized Service Provider or GOBIZ branch.
- Repairs or diagnostics performed by individuals not authorized in writing by Independent Authorized Service Providers will not be covered under warranty.
- This warranty is transferable between ownership of the original installation.
- Engine cooling heaters provided by GOBIZ (block heaters), heating controls, and circulation pumps are only covered during the first year of the warranty period.
- GOBIZ may, at its sole discretion, choose to repair, replace, or refund an item of equipment.
- The user must take into account the control and general maintenance notices of the GOBIZ Generator in a timely manner and have the necessary control/maintenance carried out.
- Cabinets are guaranteed against rust for the first year. This applies to ownership. Damage that occurs after the generator is received is the owner's responsibility and is not covered by this warranty. Scratches, scuffs, dents, or scratches on the painted casing must be repaired immediately by the owner.
- The warranty applies to permanently attached and installed units.

- Damage or consequential damage to covered components, resulting from the use of a non-original equipment manufacturer (OEM) part will not be covered by the warranty.
- Proof that all required maintenance has been performed must be provided.
- Travel authorization is limited to 100 miles and three (3) hours from the nearest Independent Authorized Service Provider (whichever is less). Additional travel requirements are not covered.
- The user is obliged to carry out maintenance/checking within the periods and working hours specified in the product user manual.

The following situations are NOT covered by this warranty:

- Airplanes, ferries, railways, buses, helicopters, snowmobiles, snowcats, off-road vehicles, or any other form of transportation not accepted as standard by GOBIZ.
- Products that have been modified or altered in any way not authorized in writing by GOBIZ.
- Battery, fuses, bulbs, engine oils, and related labor.
- Improper installation, placement in a harsh or saltwater environment, improper installation, corroding steel enclosures where the integrity of the paint has been compromised.
- Units sold, rated, or used for "Trailer Mounted" or "Rental Unit" applications as defined by GOBIZ.
- Overtime, holiday, or emergency labor costs for repairs performed outside normal business hours.
- Incidental, consequential, or indirect damages arising from delay in repair or replacement of any defective part(s).
- Malfunctions that occur due to a service operation or external reasons that are not under the control of GOBIZ.
- Normal maintenance costs (e.g., adjustments, associated parts, tune-ups, loose/leaking clamps, installation, and start-up costs).
- Damage or malfunctions of the generator and/or transfer switch system due to accidents, handling, processing, or improper storage.
- Damages caused by working with fuels, speeds, loads, or installations other than those recommended or specified by GOBIZ.

- Damage or malfunction of the generator and/or transfer switch caused by the use of non-original parts and/or equipment, dirty fuels, oils, coolants/antifreeze, or lack of suitable fuels, oils, or coolant/antifreeze.
- Failures due to normal wear and tear, accident, misuse, abuse, neglect, improper installation, incorrect sizing, or rodent, reptile, and/or insect infestation.
- Rental equipment used during warranty repairs or extraordinary equipment used for generator removal and/or reassembly (e.g., cranes, winches, lifts, etc.).

THIS WARRANTY EXCLUDES ALL OTHER WARRANTIES, EXPRESSED OR IMPLIED. SPECIFICALLY, GOBIZ MAKES NO OTHER WARRANTY OF MERCHANTABILITY OR FITNESS FOR A PARTICULAR PURPOSE. ANY WARRANTIES PERMITTED BY LAW SHALL BE LIMITED TO THE DURATION OF THIS WARRANTY PROVISION. GOBIZ'S RESPONSIBILITY SHALL BE THE REPAIR OR REPLACEMENT OF PARTS AS STATED ABOVE. FAILURES AND DAMAGES CAUSED BY USER NEGLIGENCE ARE NOT GOBIZ'S RESPONSIBILITY.

THIS WARRANTY GIVES YOU SPECIFIC LEGAL RIGHTS. YOU MAY HAVE OTHER RIGHTS UNDER APPLICABLE LAWS.

GOBIZ ENERJI A.S. GO-BIZ GO-BUSINESS GENERATOR 34218 AGAOGLU MY OFFICE 212 ISTANBUL / TURKIYE

Tel: +90 (850) 241 0227 - +90 (850) 241 8480 info@gobizenerji.com

Visit our website to find the nearest GO-BIZ Solution Partner and download the terms of use and maintenance:

www.gobusiness.com.tr - www.gobizenerji.com

MAINTENANCE TRACKING CHART

INSPECTION AND MAINTENANCE IN 50 HOURS								SERVICES
	INSPECTION DAILY OR EVERY 12 HOURS							USER
		WEEKLY INSPECTION						USER
			INSPECTION AND MAINTENANCE EVERY 100 HOURS OR EVERY 6 MONTHS					SERVICES
				INSPECTION AND MAINTENANCE EVERY 200 HOURS OR ANNUALLY				SERVICES
					INSPECTION AND MAINTENANCE EVERY 500 HOURS OR EVERY 2 YEARS			SERVICES
						INSPECTION AND MAINTENANCE EVERY 1000 HOURS		SERVICES
							INSPECTION AND MAINTENANCE EVERY 2000 HOURS	SERVICES
✓	✓	✓		✓				Check radiator coolant
	✓	✓	✓					Check the oil level fluid in the crankcase
✓	✓	✓	✓	✓	✓	✓	✓	Check engine sounds
✓	✓	✓	✓	✓	✓	✓	✓	Check for water in the fuel prefilter
✓			✓					Check air filter, clean with compressed air if necessary
✓				✓	✓	✓	✓	Check engine oil
✓				✓	✓	✓	✓	Check oil filter
				✓	✓	✓	✓	Check fuel filter elements
				✓	✓	✓	✓	Check air filter elements
✓		✓		✓	✓	✓	✓	Run the generator in idle or test mode for 15 minutes
✓		✓		✓	✓	✓	✓	Check engine oil pressure values from the control panel
✓		✓		✓	✓	✓	✓	Check the water temperature value from the control panel
✓		✓		✓	✓	✓	✓	Checking the alternator output voltage and frequency via the control panel
							✓	Check the cleanliness of the crankcase ventilation pipe
							✓	Checking, testing and adjusting the fuel pump
							✓	Checking, testing and adjusting injectors
						✓	✓	Checking the turbocharging system
✓	✓	✓	✓	✓	✓	✓	✓	Check the state of charge of the battery pack, its connections and terminals for oxidation and, if necessary, Checking for cleaning
✓			✓	✓	✓	✓	✓	Checking starter motor, charging alternator, relay and fuse connections
✓	✓	✓	✓	✓	✓	✓	✓	Checking whether the engine jacket water heater is working
					✓	✓	✓	Replacing engine coolant (water + antifreeze)

Note: Working hours and periods are valid, whichever comes first.

IN ORDER TO PROTECT THE WARRANTY PERIOD, THE USER IS RESPONSIBLE TO REPORT EVERY SERVICE PROCESS AND SERVICE FORM TO servicedepartment@gobizenerji.com

www.gobizenerji.com

BUSINESS SERVICE


GOBIZ®